ISEBE LEMFUNDO LEMPUMA KOLONI
EASTERN CAPE EDUCATION DEPARTMENT
OOS-KAAP ONDERWYSDEPARTEMENT

NATIONAL SENIOR CERTIFICATE

GRADE 12

ENGINEERING GRAPHICS AND DESIGN P2

SEPTEMBER 2022

PREPARATORY EXAMINATION

MARKS: 200

TIME: 3 hours

This question paper consists of 6 pages.

Copyright reserved

INSTRUCTIONS AND INFORMATION

1. The question paper consists of FOUR questions.
2. Answer ALL the questions.
3. ALL drawings must be drawn to scale 1 : 1, unless otherwise stated.
4. ALL the questions must be answered on the answer sheets provided.
5. ALL the answer sheets must be re-stapled in numerical sequence and handed in irrespective of whether the question was attempted or not.
6. Careful time management is essential in order to complete all the questions.
7. Print your name in the block provided on every ANSWER SHEET.
8. ALL answers must be drawn accurately and neatly.
9. Any details or dimensions not given must be estimated in good proportion.
10. ALL drawings are in third angle orthographic projection, unless otherwise stated.

FOR OFFICIAL USE ONLY

		MODERATED MARK
1		
2		
3		
4		
TOTAL		
	2 0 0	2 0 0

FINAL CONVERTED MARK	CHECKED BY
100	

COMPLETE THE FOLLOWING:

NAME

NAME

EXAMINATION CENTRE

SCHOOL

Downloaded from Grade12pastexampapers.co.za

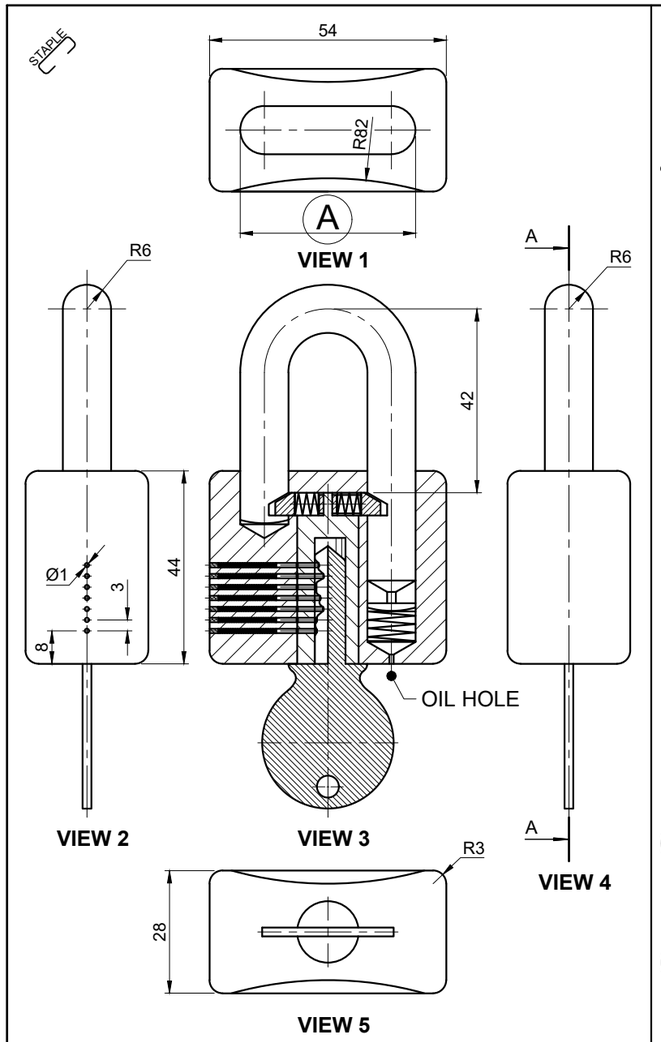

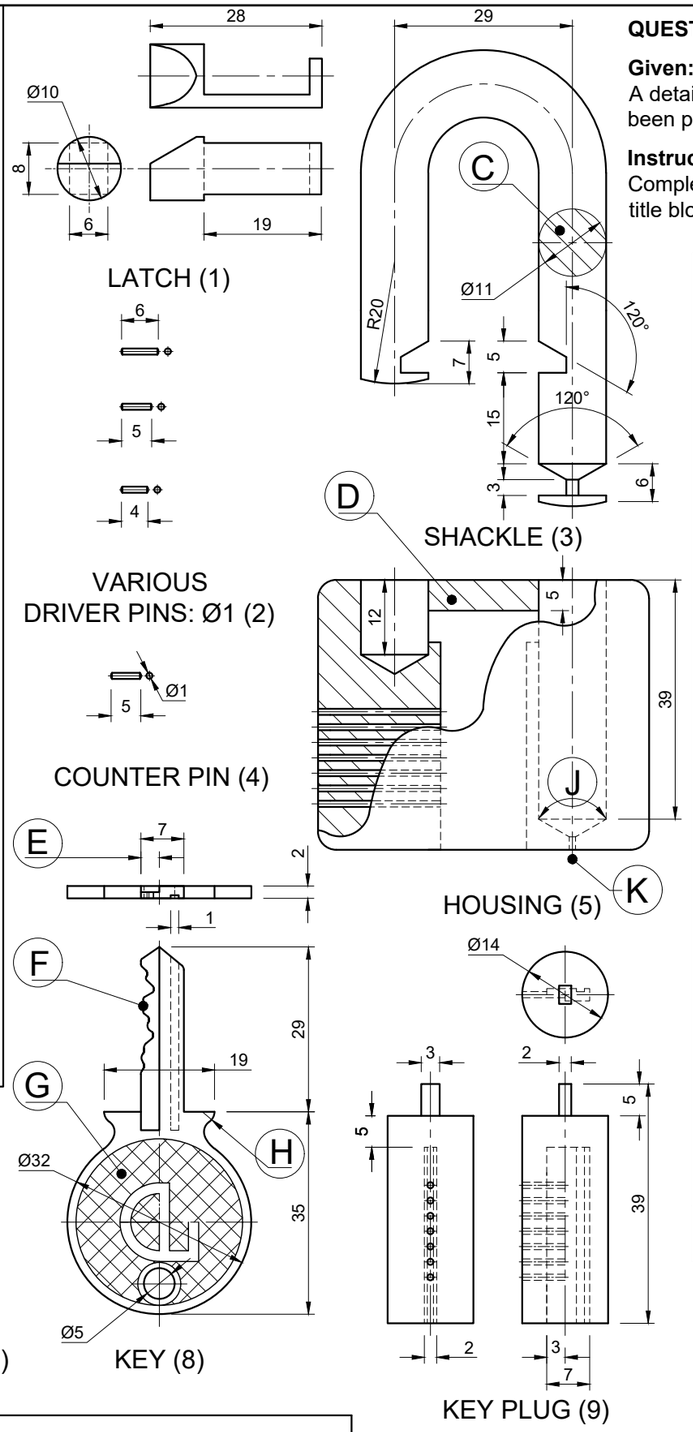

QUESTION 1: ANALYTICAL (MECHANICAL)

Given:
A detailed drawing of a padlock, a title block, assembled views and a table of questions. The drawings have not been prepared to the indicated scale.

Instructions:
Complete the table below by neatly answering the questions, which all refer to the accompanying drawings and the title block. **[29]**

	QUESTIONS	ANSWERS		
1	What model padlock must be manufactured?		1	
2	What is the file name of the drawing?		1	
3	What is the name of the programme that was used to draw the drawing?		1	
4	How many revisions were made?		1	
5	What does NTS stand for?		1	
6	What, according to the note, determined the shape of the key at F?		1	
7	What is the diameter for the DRIVER PINS?		1	
8	What type of method was used to draw the spring coils (B) ?		2	
9	How many total parts does the padlock consist of?		2	
10	Determine the degree at J.		1	
11	What is the dimension at E?		1	
12	What is the purpose of the hole at K?		1	
13	What would VIEW 3 be called?		2	
14	What would VIEW 5 be called?		1	
15	What type of section is at C?		1	
16	What type of section is at D?		1	
17	What is the purpose of the feature at G?		2	
18	What is the measurement at A?		2	
19	How long did it take to approve the drawing after it was drawn?		2	
20	In the space below (ANSWER 20), draw, in neat freehand, the SANS symbol for the projection system used.		4	
		TOTAL	29	

PARTS LIST

	PART	MATERIAL	QUANTITY		PART	MATERIAL	QUANTITY
1.	LATCH	COPPER	2	6.	SPRING COILS	STEEL	10
2.	DRIVE PINS	COPPER	7	7.	S/C PLUG	COPPER	7
3.	SHACKLE	STEEL	1	8.	KEY	STEEL	1
4.	COUNTER PIN	STEEL	7	9.	KEY PLUG	COPPER	1
5.	HOUSING	CAST IRON	1	NOTE:	THE SHAPE OF THE KEY IS DETERMINED BY THE FORMAT OF THE DRIVER PINS.		

APPROVED:	LUDIDI	2022/03/15
CHECKED:	DLOKWENI	2022/03/10
DRAWN:	SEDIDI	2022/02/15
2.		
1.		
REVISIONS		DATE

CL
LOCKS AND PADLOCKS MANUFACTURERS

CORNER KOMANI AND BELL STREET
KOMANI
5319
☎ 045 730 5801

TITLE:
PADLOCK (MODEL 3652)

ALL UNSPECIFIED RADII ARE R2.
ALL DIMENSIONS ARE IN MILLIMETRES. SCALE: 1:1
PROGRAMME: AUTOCAD 2021
FILE NAME: CL3215.dwg
PATENTED: 1988
QUANTITY: 50 000

ANSWER 20

_____ _ _____ _____ _ _____

NAME	
NAME	2

Copyright reserved

Downloaded from Grade12pastexampapers.co.za

STAPLE

0°

QUESTION 2.1: LOCI (CAM)

Given:
- The starting position of the displacement diagram for a cam.
- The specifications for the motion of the cam.

Specifications:
The cam imparts the following motion to the follower:
- It dwells for a period of 45°.
- It rises 20 mm with uniform motion for a period of 45°.
- It rises 60 mm with uniform acceleration and retardation for a period of 180°.
- It returns to the original position with simple harmonic motion for the last 90°.

Instructions:
- Draw, to a displacement scale of 1 : 1 and horizontal scale of 360° = 150 mm, the complete displacement graph for the required motion.
- Label the graph and indicate the scale.
- Show ALL necessary construction.

[19]

ASSESSMENT CRITERIA			
1	CONSTRUCTION	2	
2	DWELL + UNIFORM MOTION	$1\frac{1}{2}$	
3	ACCELERATION AND RETARDATION	7	
4	SIMPLE HARMONIC	$7\frac{1}{2}$	
5	LABEL + SCALE	1	
	SUB-TOTAL 2.1	**19**	

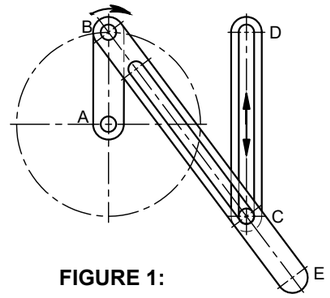

FIGURE 1:

QUESTION 2.2: LOCI (MECHANISM)

Given:
- Figure 1 shows the detail of a rotating crank AB, connecting rod BE and a fixed vertical groove CD.
- Figure 2 shows the schematic diagram of the drawing.
- Starting point A of the rotating crank.

Motion:
- The rotating crank AB moves clockwise for a full 360°.
- The connecting rod BE moves while it slides vertically, in equal segments, from C to D for the first 180° and back, in equal segment, to its original position for the last 180°.

Instructions:
- Draw the given schematic diagram (FIGURE 2).
- Project and draw the loci of point E to the given motion.
- Show ALL necessary construction.

[19]

A

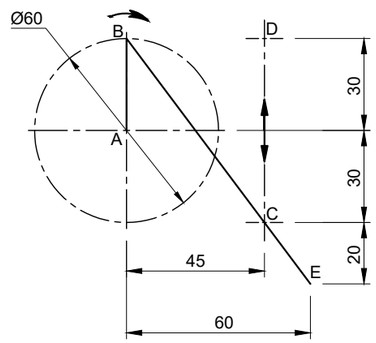

FIGURE 2:

ASSESSMENT CRITERIA			
1	CONSTRUCTION OF DIAGRAM	4	
2	CONST. OF CIRCLE IN 12 EQUAL PARTS	2	
3	CONSTRUCTION OF LOCI	5	
4	LOCI OF POINT E	8	
	SUB-TOTAL 2.2	**19**	
	SUB-TOTAL 2.1	**19**	
	TOTAL	**38**	

NAME	
NAME	3

Copyright reserved

Downloaded from Grade12pastexampapers.co.za

STAPLE

QUESTION 3: ISOMETRIC

Given:
- Three views of a MACHINE PART in third angle orthographic projection.
- Starting point S.

Instructions:
- Draw, to scale 1 : 1, an isometric view of the MACHINE PART.
- Make point S the lowest point of the drawing.
- Show ALL necessary construction.
- NO hidden detail is required.

[42]

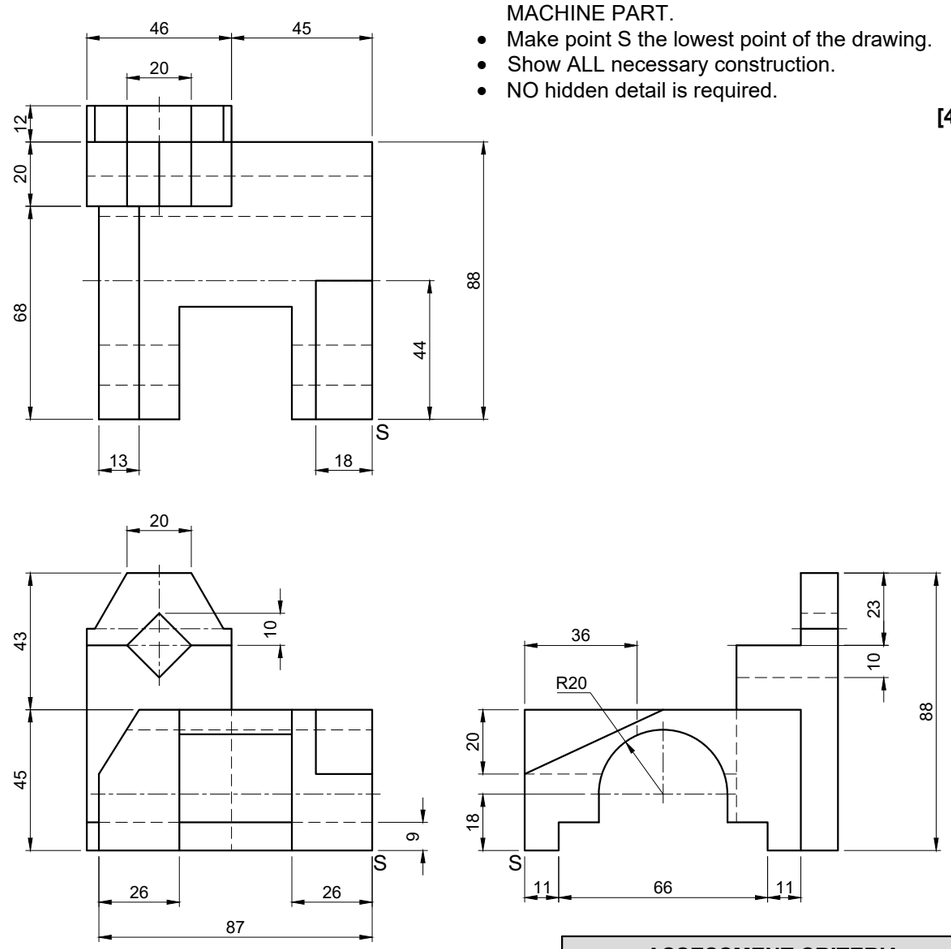

ASSESSMENT CRITERIA			
1	CONSTR. + PLACEMENT	$2\frac{1}{2}$	
2	ISOMETRIC LINES	30	
3	NON ISOMETRIC LINES	5	
4	HALF CIRCLE + CONSTR.	$3\frac{1}{2}$	
5	CENTRE LINES	1	
	TOTAL	**42**	

S

NAME

NAME 4

Copyright reserved

Downloaded from Grade12pastexampapers.co.za

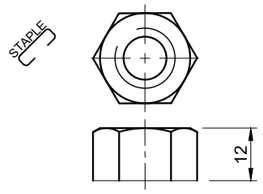

M14 X 2 NUT (1)

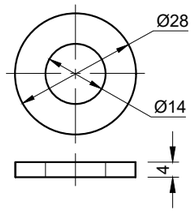

M14 WASHER (2)

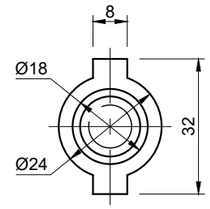

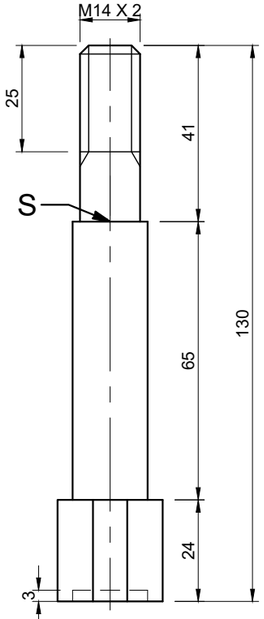

SHAFT (6)

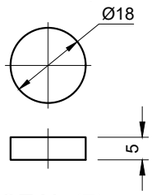

SEAL (7)

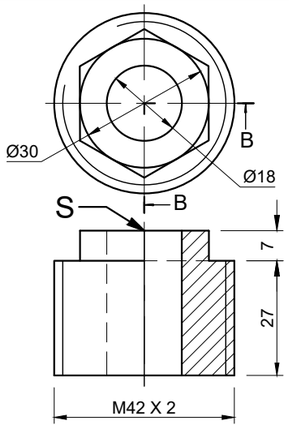

GLAND (3)

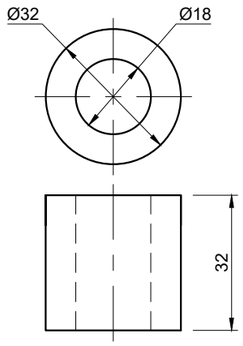

GLAND SEAL (4)

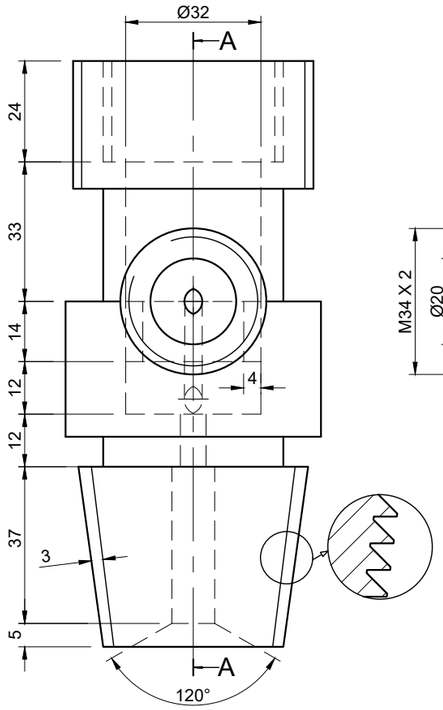

HOUSING (8)

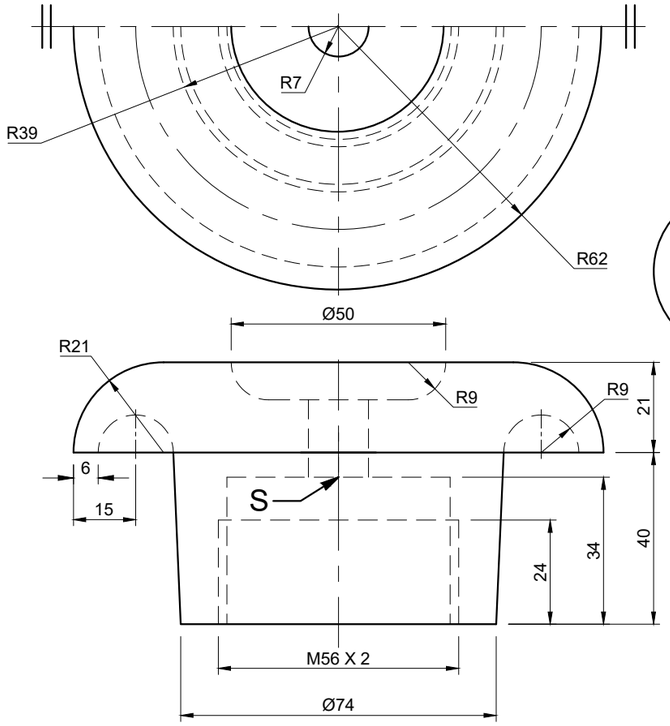

HANDLE (5)

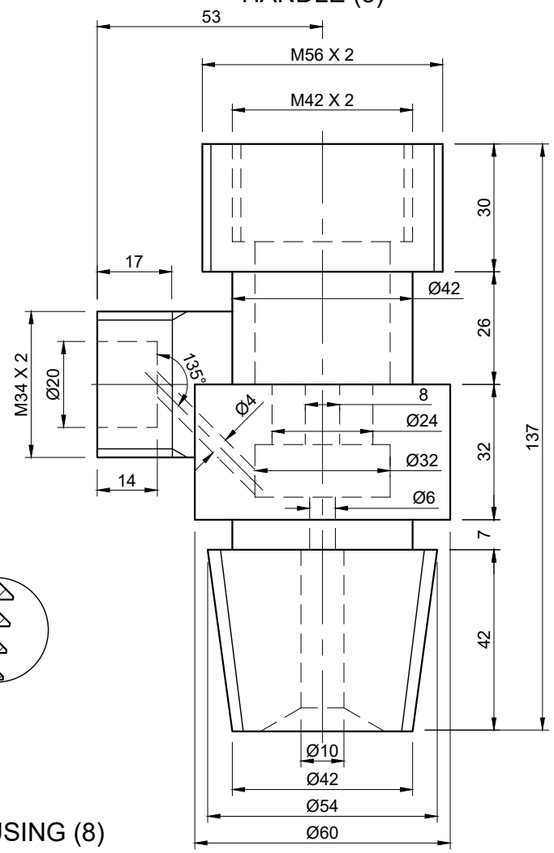

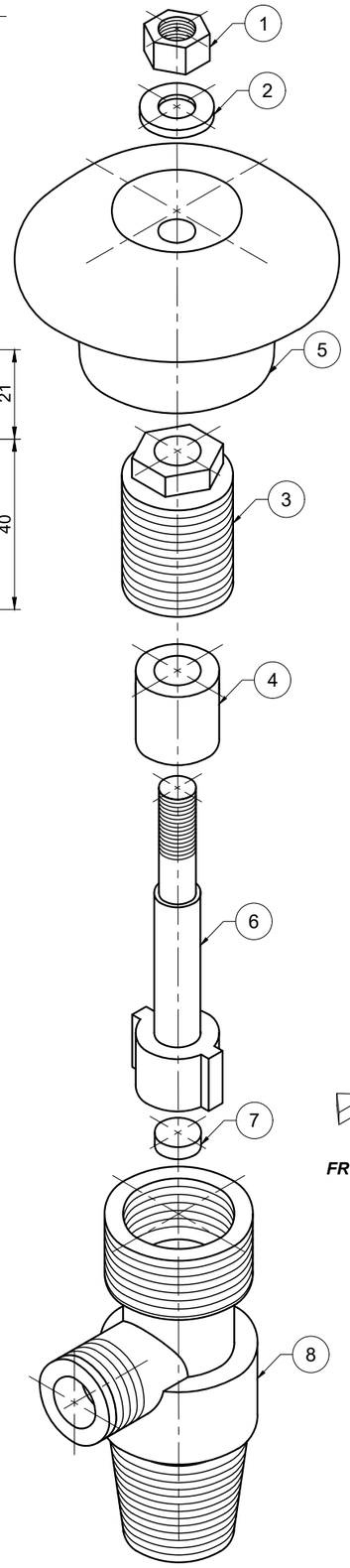

FRONT VIEW

QUESTION 4: MECHANICAL ASSEMBLY

Given:

- Orthographic views of each of the parts of the gas valve.
- The exploded isometric drawing of the parts of a gas valve assembly, showing the position of each part relative to the others.
- Starting point S on the answer sheet, page 6.

Instructions:

- Answer this question on page 6.
- Draw, to scale 1 : 1 and in third angle orthographic projection, the following views of the assembled parts of the gas valve.
- **The front half of the top view** of the gas valve assembly in symmetry**.**
- **The sectional front view** of the gas valve assembly, on cutting plane A-A, as seen from the direction of the arrow shown on the exploded isometric drawing. The cutting plane is shown on the left view of the housing (part 8).

NOTE:

1. Starting point S is indicated on the front views of the gland (part 3), the handle (part 5) and the shaft (part 6).
2. Assemble the gas valve in its closed position.
3. Show**,** in the sectional front view, THREE faces of the M14 nut.
4. Show ALL construction.
5. NO hidden detail is required.
6. Make use of a partial section to indicate the seal at the bottom of the shaft.
7. All drawings must comply with the guidelines contained in *SANS 10111*.

Add the following features on the drawing:

- The cutting plane A-A in the **TOP VIEW**.
- The convention symbol to indicate symmetry in the **TOP VIEW**.
- Label the assembly: **GAS VALVE**
- Indicate the scale **[91]**

TITLE:

GAS VALVE

GAS-EASY
SOLUTIONS

BELL STREET 21
KOMANI
5319
045 730 5801

ALL DIMENSIONS ARE MILLIMETRES.

ALL UNSPECIFIED RADII ARE R3.

PARTS LIST

PART	MATERIAL	QUANTITY
1. M14 NUT X 2	STD	1
2. M14 WASHER	STD	1
3. GLAND	COPPER	1
4. GLAND SEAL	RUBBER	1
5. HANDLE	CAST IRON	1
6. SHAFT	COPPER	1
7. SEAL	RUBBER	1
8. HOUSING	COPPER	1

Copyright reserved

Please turn over

Downloaded from Grade12pastexampapers.co.za

STAPLE

S

ASSESSMENT CRITERIA			
TOP VIEW			
1	M14 NUT + WASHER	$4\frac{1}{2}$	
2	HANDLE	1	
3	CUTTING PLANE	3	
4	CENTRE LINES + CONVEN. SYMMETRY LINES	2	
	SUB-TOTAL	**$10\frac{1}{2}$**	
SECTIONAL FRONT VIEW			
1	M14 NUT	$5\frac{1}{2}$	
2	M14 WASHER	$2\frac{1}{2}$	
3	GLAND	5	
4	GLAND SEAL	$2\frac{1}{2}$	
5	HANDLE	$12\frac{1}{2}$	
6	SHAFT	$11\frac{1}{2}$	
7	SEAL	2	
8	HOUSING	$28\frac{1}{2}$	
9	ASSEMBLY	7	
10	TITLE + SCALE	1	
11	CENTRE LINES	$2\frac{1}{2}$	
	SUB-TOTAL	**$80\frac{1}{2}$**	
	TOTAL	**91**	

NAME	
NAME	6

Copyright reserved

Downloaded from Grade12pastexampapers.co.za