Province of the
EASTERN CAPE
EDUCATION

Iphondo leMpuma Kapa: Isebe leMfundo
Provinsie van die Oos Kaap: Department van Onderwys
Porafensie Ya Kapa Botjahabela: Lefapha la Thuto

NATIONAL SENIOR CERTIFICATE

GRADE 12

SEPTEMBER 2025

CIVIL TECHNOLOGY: CONSTRUCTION

MARKS: **200**

TIME: **3 hours**

This paper consists of 19 pages including 2 answer sheets.

This document was downloaded from www.ecexams.co.za.
Downloaded from Grade12pastexampapers.co.za

REQUIREMENTS:

1. ANSWER BOOK
2. Drawing instruments
3. A non-programmable pocket calculator

INSTRUCTIONS AND INFORMATION

1. This question paper consists of SIX questions: TWO questions are generic and FOUR questions are subject specific.
2. Answer ALL the questions.
3. Answer each question as a whole. Do NOT separate subsections of questions.
4. Start the answer to EACH question on a NEW page.
5. Do NOT write in the margins of the ANSWER BOOK.
6. You may use sketches to illustrate your answers.
7. Write ALL calculations and answers in the ANSWER BOOK or on the attached ANSWER SHEETS.
8. Use the mark allocation as a guide to the length of your answers.
9. Make drawings and sketches in pencil, fully dimensioned and neatly finished off with descriptive titles and notes to conform to the *SANS/SABS Code of Practice for Building Drawings.*
10. For the purpose of this question paper, the size of a brick should be taken as 220 mm x 110 mm x 75 mm.
11. Use your own discretion where dimensions and/or details have been omitted.
12. Answer QUESTIONS 2.1, 6.10 and 6.11 on the attached ANSWER SHEETS using drawing instruments where necessary.
13. Write your NAME on every ANSWER SHEET and hand them in with your ANSWER BOOK, whether you have answered the question or not.
14. Due to electronic transfer, drawings in the question paper are NOT to scale.

Copyright reserved

This document was downloaded from www.ecexams.co.za.
Downloaded from Grade12pastexampapers.co.za

QUESTION 1: SAFETY AND MATERIALS (GENERIC)

Start this question on a NEW page.

1.1 Identify the correct requirements regarding stairways used during construction:

1.1.1 Stairways that will not be a permanent part of the building under construction must have landings of at least **800 mm x 600 mm / 760 mm x 560 mm**. (1)

1.1.2 … for every **2,7 m / 3,7 m** or less vertical rise. (1)

1.1.3 Stairways must be installed at least at **30º / 35º**. (1)

1.1.4 … and no more than **60º / 50º** from the horizontal. (1)

1.1.5 Doors and gates opening directly into a stairway must have a platform that extends at least **510 mm / 910 mm** beyond the swing of the door or gate. (1)

1.2 Name any TWO materials that ladders are generally made of. (2 x 1) (2)

1.3 Name the TWO characteristics that define a builder's hoist. (2 x 1) (2)

1.4 Describe the difference of the surface finish between a *water-based paint* and an *oil-based paint*. (2 x 1) (2)

1.5 Name any THREE properties of the curing process of concrete. (3 x 1) (3)

1.6 Name the THREE advantages of electroplating. (3 x 1) (3)

1.7 Briefly describe the process of powder coating. (2)

1.8 What is the main ingredient used in galvanising? (1)

[20]

This document was downloaded from www.ecexams.co.za.
Downloaded from Grade12pastexampapers.co.za

QUESTION 2: GRAPHICS, JOINING AND EQUIPMENT

Start this question on a NEW page.

2.1 FIGURE 2.1 on ANSWER SHEET A shows an incomplete floorplan of a building, scale 1 : 100 is used.
Complete the floorplan by using the following information:

2.1.1	Outside door 2.1.A	(2)
2.1.2	Window 2.1.B	(2)
2.1.3	Water closet 2.1.C	(2)
2.1.4	Washbasin 2.1.D	(2)
2.1.5	Wash tub 2.1.E	(2)
2.1.6	One-way switch-single pole 2.1.F	(2)
2.1.7	Fluorescent light 2.1.G	(2)
2.1.8	Socket outlet 2.1.H	(2)
2.1.9	Grease trap 2.1.I	(2)
2.1.10	Wall light 2.1.J	(2)

2.2 FIGURE 2.2 below shows a surveying tool used on a construction site. Study the figure and answer the following questions.

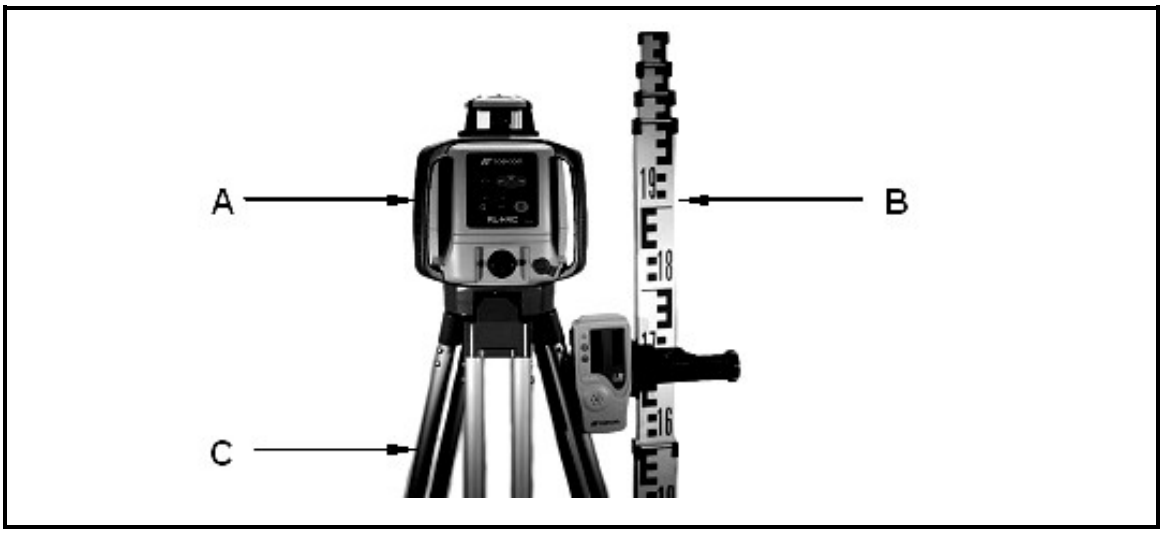

FIGURE 2.2

2.2.1	Identify parts **A** to **C**.	(3)
2.2.2	Explain how will you take care of part **A**.	(2)

This document was downloaded from www.ecexams.co.za.
Downloaded from Grade12pastexampapers.co.za

2.3 FIGURE 2.3 below shows the readings of a dumpy level on a telescopic staff. Answer the following questions with regard to the readings.

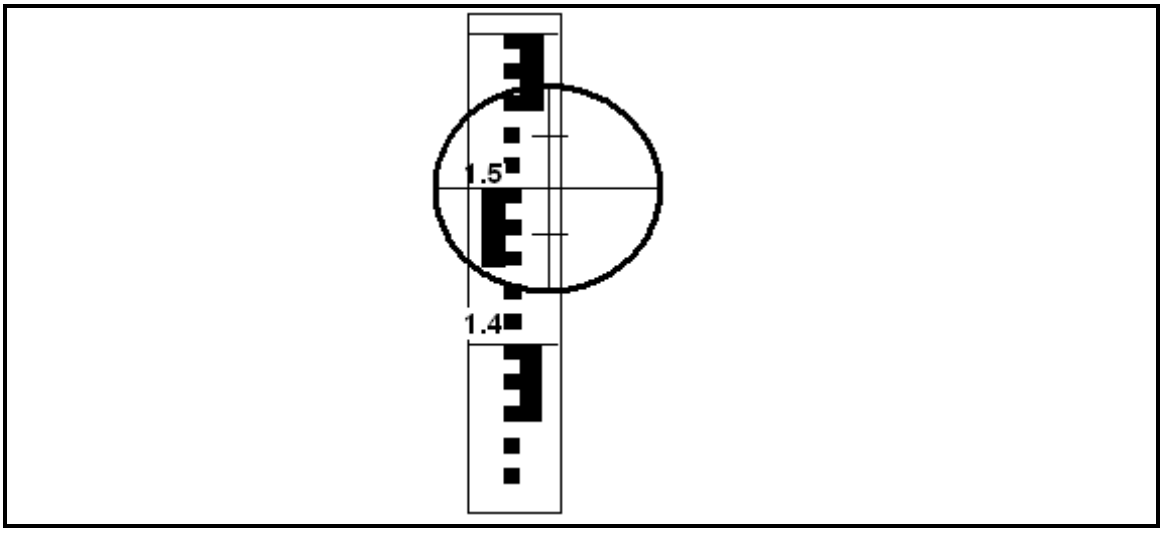

FIGURE 2.3

2.3.1 What is the height reading on the staff? (1)

2.3.2 What are the minimum and maximum distances that could be determined accurately on the staff? (2)

2.4 Name the maintenance measures for the multi-detector with reference to the following facets:

2.4.1 Cleaning method (1)

2.4.2 Storage over a long period (1)

2.5 Identify the types of nuts illustrated in FIGURES **A** to **C**.

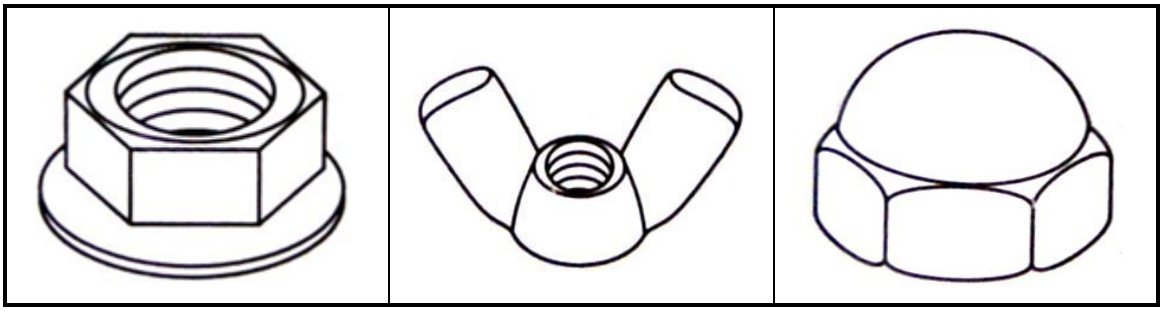

FIGURE A **FIGURE B** **FIGURE C** (3)

This document was downloaded from www.ecexams.co.za.
Downloaded from Grade12pastexampapers.co.za

2.6 The pictures below illustrate the steps followed when fixing material to a floor with a fastener.

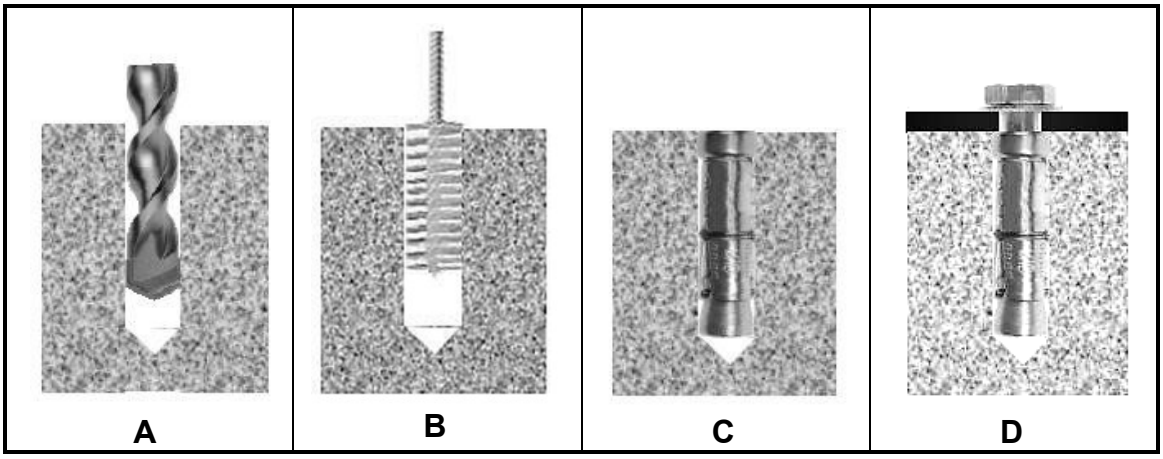

2.6.1 Identify the fastener that is used in step **D**. (1)

2.6.2 Describe the steps from **A** to **D** above in your ANSWER BOOK. (4)

2.6.3 Justify the use of this fastener when securing the bracket of a heavy gate to a wall. (2)

[40]

TOTAL SECTION A: 60

This document was downloaded from www.ecexams.co.za.
Downloaded from Grade12pastexampapers.co.za

QUESTION 3: ROOFS, STAIRCASES AND JOINING (SPECIFIC)

Start this question on a NEW page.

3.1 Name THREE different types of roof trusses. (3 x 1) (3)

3.2 Name THREE advantages for the use of roof underlays. (3 x 1) (3)

3.3 Answer the following questions with regard to the roof truss construction in FIGURE 3.3.

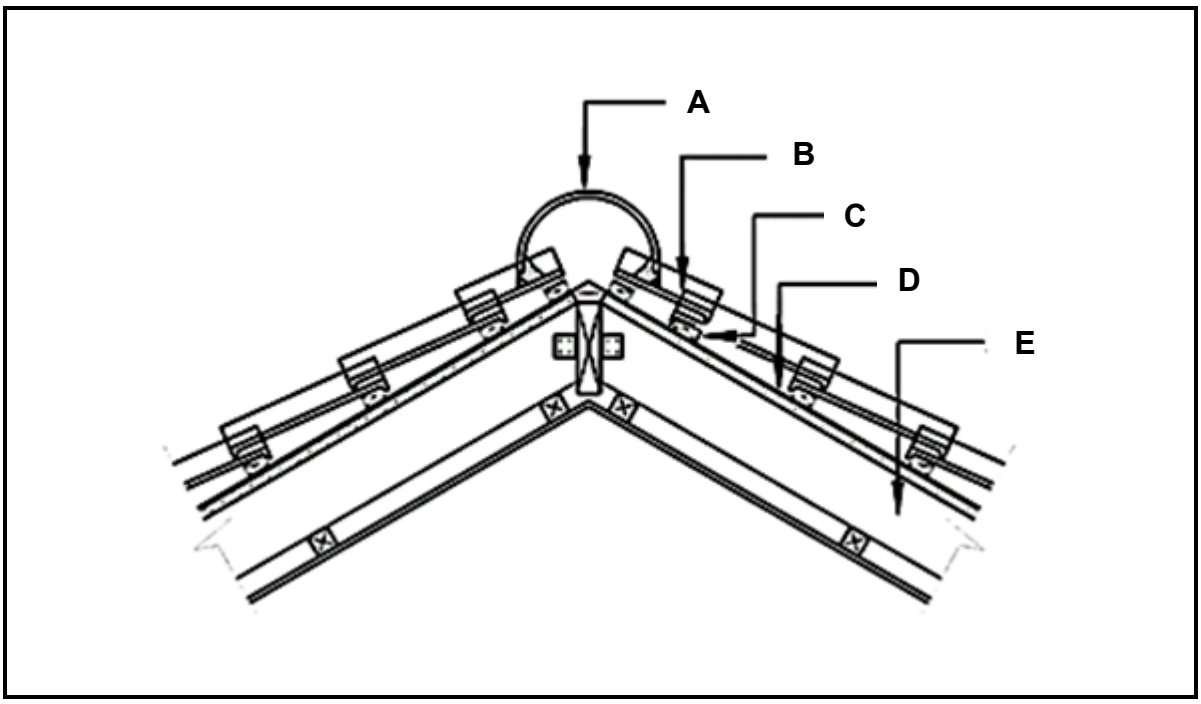

FIGURE 3.3

3.3.1 Name parts **A** to **E**. (5 x 1) (5)

3.3.2 What are the measurements (sizes) of part **E**? (2 x 1) (2)

3.3.3 What is the purpose (function) of part **D**? (1)

3.4 Name the following terms with regard to staircases.

3.4.1 The horizontal distance covered by the stairs. (1)

3.4.2 A level area at the top of a flight of stairs. (1)

3.4.3 The flat horizontal surface of a step. (1)

This document was downloaded from www.ecexams.co.za.
Downloaded from Grade12pastexampapers.co.za

3.5 Name the parts **A** to **C** of the stair construction in FIGURE 3.5.

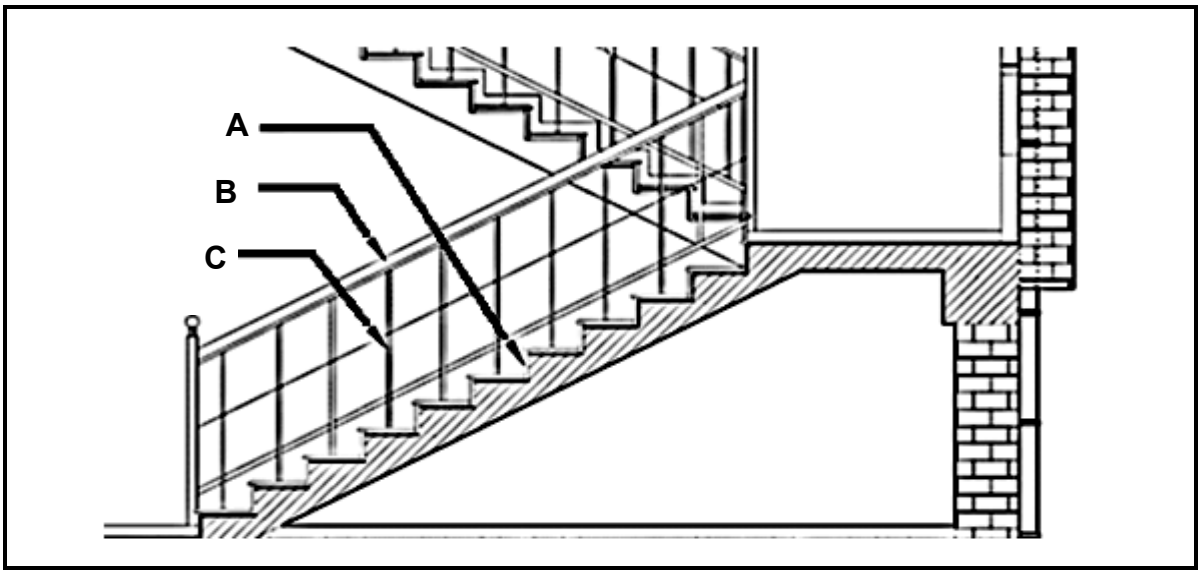

FIGURE 3.5 (3 x 1) (3)

3.6 What is the minimum width of a stair? (1)

3.7 What is the maximum slope of stairs that will be used by the public? (1)

3.8 Identify the following statements as TRUE or FALSE:

3.8.1 Workers may not work on a roof in rainy conditions. (1)

3.8.2 Staircases can only be made from wood. (1)

3.8.3 All joining materials must be resistant to rust. (1)

3.9 Answer the following questions with regard to the construction in FIGURE 3.9.

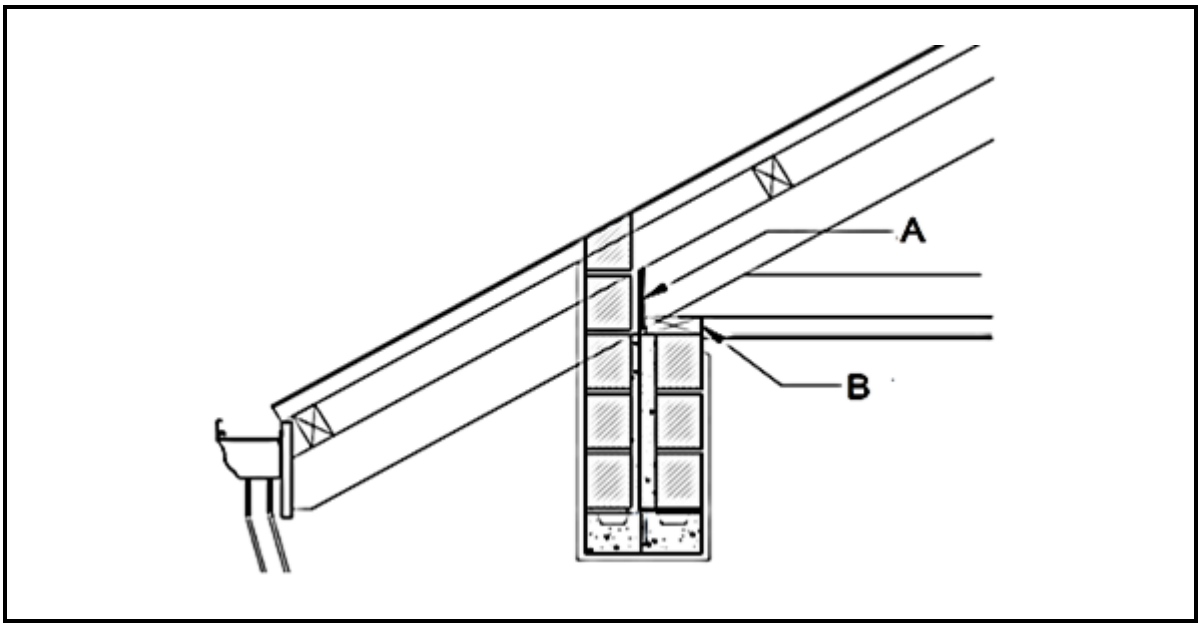

FIGURE 3.9

3.9.1 What construction parts are joined together in **A**? (1)

This document was downloaded from www.ecexams.co.za.
Downloaded from Grade12pastexampapers.co.za

3.9.2 Name the parts **A** and **B**. (2 x 1) (2)

3.9.3 If roof sheeting is used, what will be the minimum depth that part **A** will be built into the wall? (1)

3.9.4 How will part **A** be fixed to the beam? (1)

[30]

This document was downloaded from www.ecexams.co.za.
Downloaded from Grade12pastexampapers.co.za

QUESTION 4: MATERIAL, EXCAVATIONS, FOUNDATIONS, EQUIPMENT AND TOOLS (SPECIFIC)

Start this question on a NEW page.

4.1 Choose a description from COLUMN B that fits best with the item in COLUMN A. Write only the letter (A–H) next to the question numbers (4.1.1 to 4.1.6) in the ANSWER BOOK, for example 4.1.7 I

COLUMN A		COLUMN B	
4.1.1	Slump test	A	smaller volume of concrete
4.1.2	Boom pump	B	non-ferrous metal
4.1.3	Steel	C	tested in a laboratory
4.1.4	Cube test	D	basic sealant
4.1.5	Line pipe concrete pump	E	ferrous metal
4.1.6	Brass	F	tested on site
		G	high volume of concrete
		H	packaging product

(6 x 1) (6)

4.2 Name FOUR types of apparatus used for the slump test. (4 x 1) (4)

4.3 Discuss the purposes of the cube test. (2)

4.4 Draw a neat sketch of a normal failure of the cube test in the ANSWER BOOK. (3)

4.5 Discuss the purposes of cladding of the external surfaces of buildings. (3)

4.6 Name TWO methods of fixing cladding. (2 x 1) (2)

4.7 Name THREE safety factors and regulations that a site manager must have in place, before any excavation may commence. (3 x 1) (3)

4.8 Discuss the safety precautions during excavations with reference to the following:

4.8.1 Safeguarding of excavations (1)

4.8.2 Wearing of protective clothing (1)

4.8.3 Access to a deep excavation (1)

4.8.4 Carrying out inspections (1)

This document was downloaded from www.ecexams.co.za.
Downloaded from Grade12pastexampapers.co.za

4.9 Identify the following statements as TRUE or FALSE.

4.9.1 Bracing is necessary where trenches are deeper than 1,5 metres. (1)

4.9.2 Benching can help prevent the sides of trenches from collapsing. (1)

4.9.3 Machinery must be 2 metres from the trench during excavations. (1)

4.9.4 Excavated soil must be 1,6 metres from trench edges. (1)

4.10 Answer the following questions with regard to the shuttering in FIGURE 4.10.

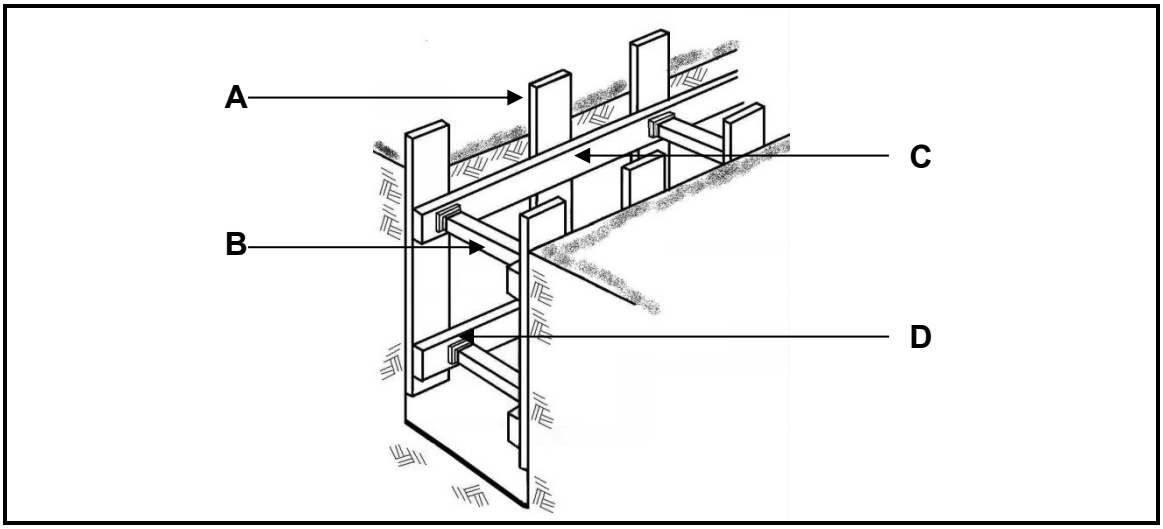

FIGURE 4.10

4.10.1 Identify the type of soil in FIGURE 4.10. (1)

4.10.2 Name parts **A** to **D**. (4 x 1) (4)

4.11 Answer the following questions of the construction machine in FIGURE 4.11.

FIGURE 4.11

4.11.1 Identify the machine. (1)

4.11.2 Name THREE ways of maintaining the machine. (3 x 1) (3)

[40]

This document was downloaded from www.ecexams.co.za.
Downloaded from Grade12pastexampapers.co.za

QUESTION 5: BRICKWORK, GRAPHICS, PLASTER AND SCREED (SPECIFIC)

Start this question on a NEW page.

5.1 Answer the following questions with regard to the wall construction in FIGURE 5.1.

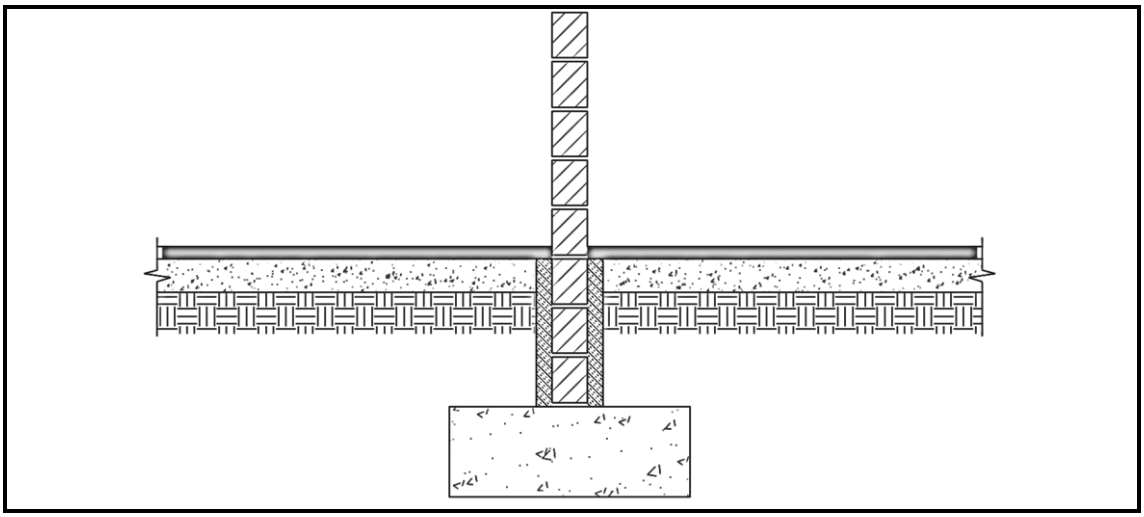

FIGURE 5.1

5.1.1 Identify this type of wall construction. (1)

5.1.2 What is the width of the wall? (1)

5.1.3 What is the maximum height for this type of wall construction? (1)

5.2 Name THREE advantages of cavity walls. (3 x 1) (3)

5.3 Answer the following questions in regard to cavity walls.

5.3.1 What is the minimum space between the two skins (walls)? (1)

5.3.2 What is the maximum length of a cavity wall? (1)

5.3.3 What is the purpose of inspection holes? (1)

5.3.4 What connects the two skins? (1)

5.3.5 What is the purpose of the weep hole? (1)

5.4 Identify the type of wall tie in FIGURE 5.4. (1)

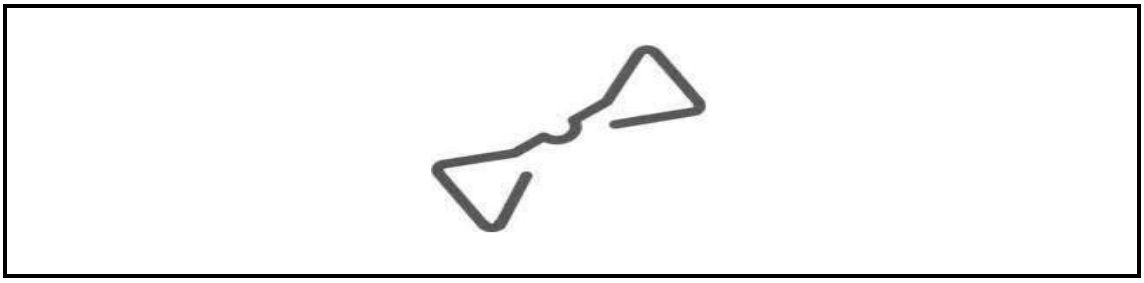

FIGURE 5.4

This document was downloaded from www.ecexams.co.za.
Downloaded from Grade12pastexampapers.co.za

5.5 Answer the questions with regard to the construction in FIGURE 5.5.

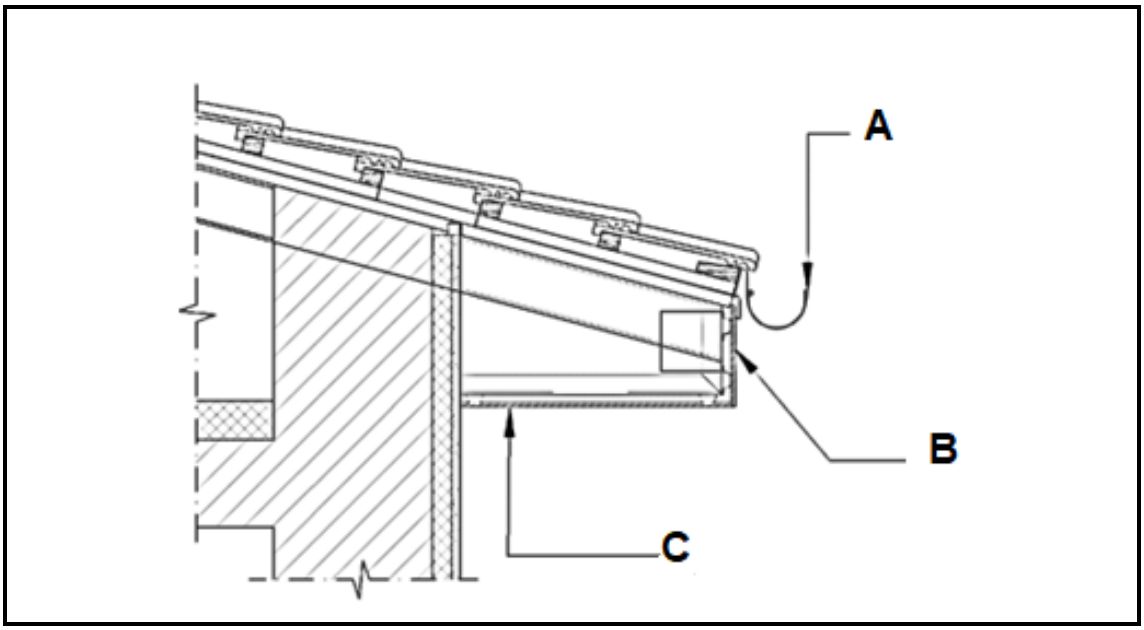

FIGURE 5.5

5.5.1 Name the parts **A** to **C**. (3 x 1) (3)

5.5.2 Is this an open or closed eave construction? (1)

5.6 Choose a description from COLUMN B that matches best with an item in COLUMN A. Write only the letter (A–F) next to the question numbers (5.6.1 to 5.6.4) in the ANSWER BOOK, for example 5.6.5 G.

COLUMN A	COLUMN B
5.6.1 Subbase	A natural soil on which the paving will be laid
5.6.2 Kerb	B sand used as grouting between paving blocks
5.6.3 Subgrade	C best edge restraint for paving
5.6.4 Bedding sand	D final layer upon which paving is laid
	E preparation of the sub-base
	F prepared layer beneath paving and bedding sand

(4 x 1) (4)

5.7 Name TWO advantages of mortar-set paving. (2 x 1) (2)

5.8 Name TWO reasons for construction failure of paving. (2 x 1) (2)

This document was downloaded from www.ecexams.co.za.
Downloaded from Grade12pastexampapers.co.za

5.9 Answer the following questions on the arch structure in FIGURE 5.9.

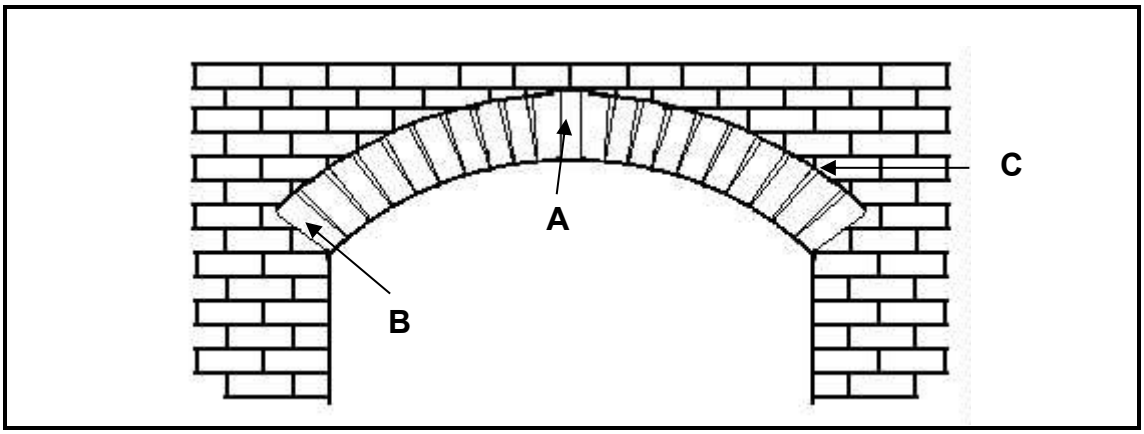

FIGURE 5.9

5.9.1 Identify the type of arch. (1)

5.9.2 Name the parts **A** to **C**. (3 x 1) (3)

5.10 Name TWO types of screed. (2 x 1) (2)

[30]

This document was downloaded from www.ecexams.co.za.
Downloaded from Grade12pastexampapers.co.za

QUESTION 6: FORMWORK, REINFORCING, FOUNDATIONS, CONCRETE FLOOR AND QUANTITIES (SPECIFIC)

Start this question on a NEW page.

6.1 Name ONE material that can be used to line formwork, to obtain a smoother finish for the concrete. (1 x 1) (1)

6.2 Name the parts **A** to **D** of to the formwork in FIGURE 6.2. (4 x 1) (4)

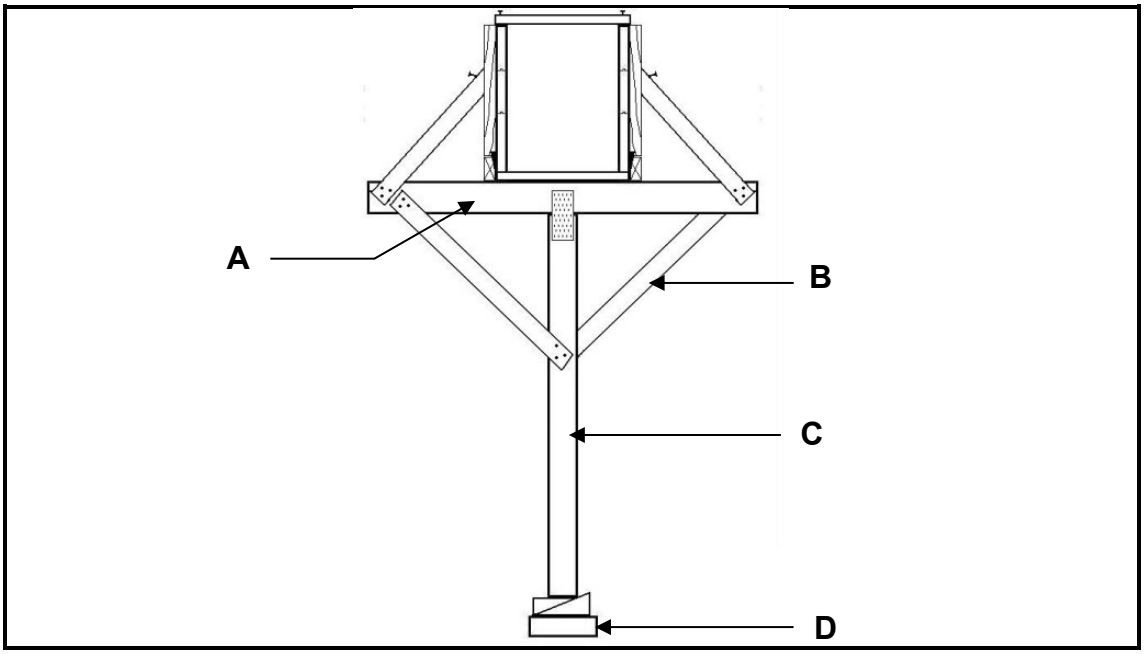

FIGURE 6.2

6.3 Answer the following in regard to the bar code: **16R10-02-200**

6.3.1 What type of steel is used? (1)

6.3.2 What is the spacing of the bars? (1)

6.3.3 What is the diameter of the bars? (1)

6.4 What forces are being counteracted by the following parts in concrete beam.

6.4.1 Anchor bar (1)

6.4.2 Stirrups (1)

6.5 Name ONE method of joining steel bars with wire. (1 x 1) (1)

6.6 Name TWO purposes of the cover depth of the reinforcing in concrete work. (2 x 1) (2)

6.7 Name TWO types of pile foundations. (2 x 1) (2)

This document was downloaded from www.ecexams.co.za.
Downloaded from Grade12pastexampapers.co.za

6.8 Name THREE reasons for the use of pile foundations. (3 x 1) (3)

6.9 Answer the questions with regard to the concrete floor in FIGURE 6.9.

FIGURE 6.9

6.9.1 Name parts **A** and **B**. (2 x 1) (2)

6.9.2 Name ONE disadvantage of this type of floor construction. (1 x 1) (1)

6.10 FIGURE 6.10 shows a floorplan a hair salon shop.
The external walls are 270 mm thick cavity walls and the internal walls are 110 mm thick half-brick walls.

Answer the following on ANSWER SHEET B.

This document was downloaded from www.ecexams.co.za.
Downloaded from Grade12pastexampapers.co.za

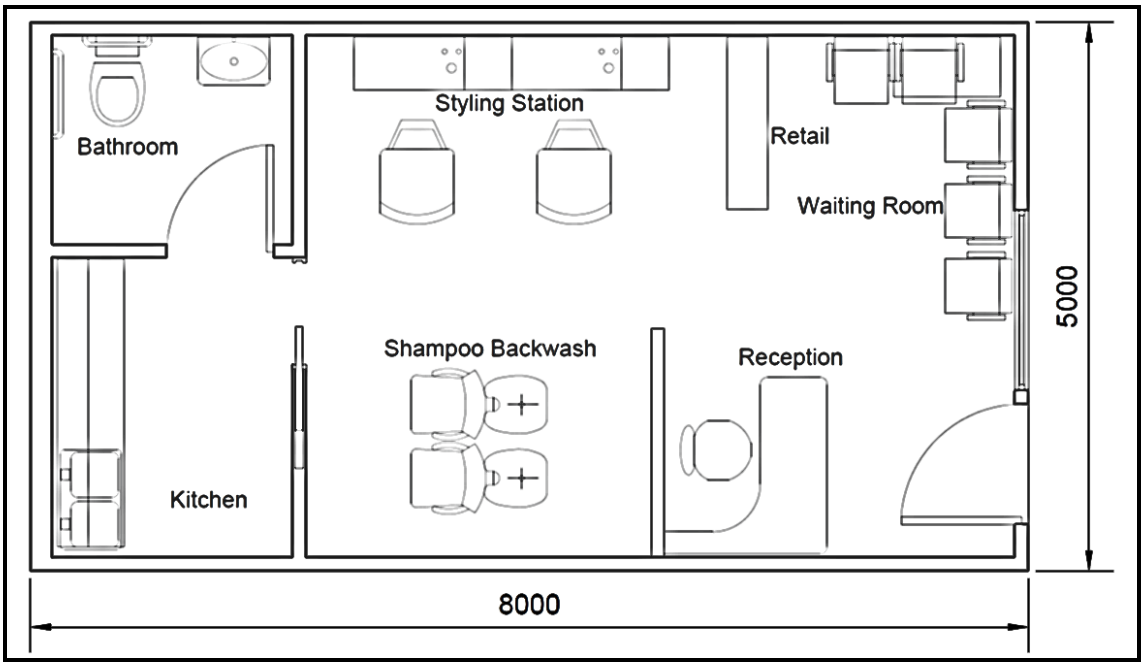

FIGURE 6.10

6.10.1 Calculate the centre-line of the external walls. (5)

6.10.2 Calculate the quantity of bricks needed for the external walls of the building if the walls are 2,4 m high.

Half-brick wall = 50 bricks per m²
A = L x B (4)

6.11 A foundation concrete footing for a small garden flat with a centre-line of 31,5 m must be cast.
The foundation concrete footing size is 350 mm x 650 mm.
The concrete mix ratio is 1 : 3 : 5.
Answer the following on ANSWER SHEET B.

6.11.1 Calculate the volume of the concrete needed for the concrete footing.

V = L x B x H (5)

6.11.2 Calculate how many bags of cement will be needed for the concrete footing. (5)
[40]

TOTAL SECTION B: 140
TOTAL: 200

This document was downloaded from www.ecexams.co.za.
Downloaded from Grade12pastexampapers.co.za

ANSWER SHEET	A	CIVIL TECHNOLOGY (GENERIC)	NAME AND SURNAME:	

2.1 Use the information on ANSWER SHEET A and complete the floor plan on scale 1 : 100. (20)

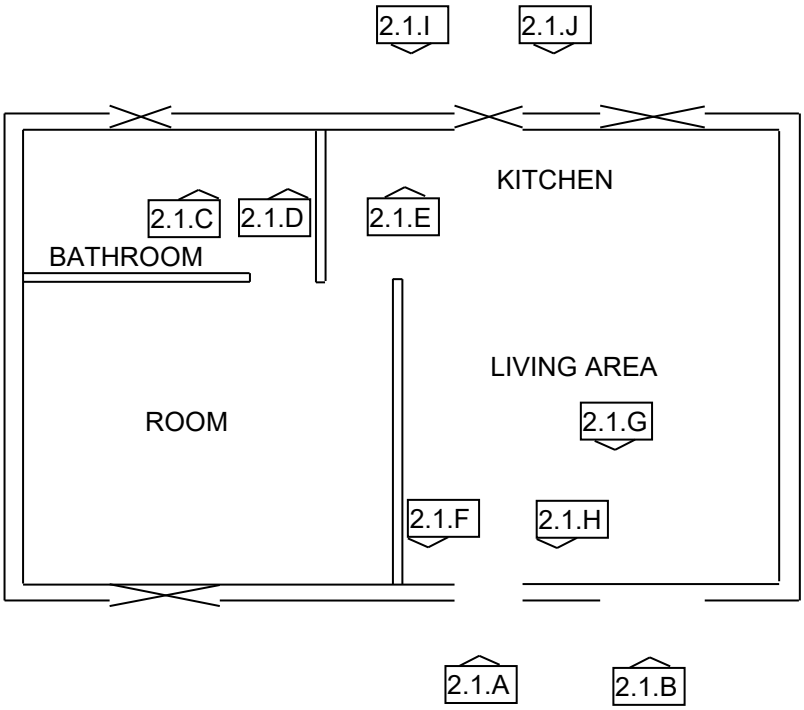

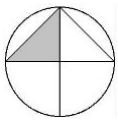

Outside door 2.1.A	2	
Window 2.1.B	2	
Water closet 2.1.C	2	
Washbasin 2.1.D	2	
Wash tub 2.1.E	2	
One-way switch-single pole 2.1.F	2	
Fluorescent light 2.1.G	2	
Socket outlet 2.1.H	2	
Grease trap 2.1.I	2	
Light wall mounted 2.1.J	2	
TOTAL	**20**	

This document was downloaded from www.ecexams.co.za.
Downloaded from Grade12pastexampapers.co.za

ANSWER SHEET	B	CIVIL TECHNOLOGY (SPECIFIC)	NAME AND SURNAME:	

A	B	C	D	A	B	C	D
6.10.1				6.11.1			
Calculate the centre-line of the external walls.				Calculate the volume of the concrete needed for the concrete footing.			
			(5)				(5)
6.10.2				6.11.2			
Calculate the quantity of bricks needed for the external walls of the building if the walls are 2,4 m high.				Calculate how many bags of cement will be needed for the concrete footing.			
			(4)				(5)
PAGE 1				PAGE 2			

Copyright reserved

This document was downloaded from www.ecexams.co.za.
Downloaded from Grade12pastexampapers.co.za