Province of the
EASTERN CAPE
EDUCATION

Iphondo leMpuma Kapa: Isebe leMfundo
Provinsie van die Oos Kaap: Department van Onderwys
Porafensie Ya Kapa Botjahabela: Lefapha la Thuto

NATIONAL SENIOR CERTIFICATE

GRADE 12

SEPTEMBER 2024

CIVIL TECHNOLOGY: CONSTRUCTION

MARKS: **200**

TIME: **3 hours**

This paper consists of 17 pages, including 2 answer sheets.

Hosted by www.ecexams.co.za.
Downloaded from Grade12pastexampapers.co.za

REQUIREMENTS:

1. Drawing instruments
2. A non-programmable pocket calculator
3. ANSWER BOOK

INSTRUCTIONS AND INFORMATION

1. This question paper consists of SIX questions: TWO questions are generic and FOUR questions are subject-specific.
2. Answer ALL the questions.
3. Answer each question as a whole. Do NOT separate subsections of questions.
4. Start the answer to EACH question on a NEW page.
5. Number the answers correctly according to the numbering system used in this question paper.
6. Do NOT write in the margins of the ANSWER BOOK.
7. You may use sketches to illustrate your answers.
8. Write ALL calculations and answers in the ANSWER BOOK or on the attached ANSWER SHEETS.
9. Use the mark allocation as a guide to the length of your answers.
10. Make drawings and sketches in pencil, fully dimensioned and neatly finished off with descriptive titles and notes to conform to the *SANS/SABS Code of Practice for Building Drawings.*
11. For the purpose of this question paper, the size of a brick should be taken as 220 mm x 110 mm x 75 mm.
12. Use your own discretion where dimensions and/or details have been omitted.
13. Answer QUESTIONS 2.1 and 6.10 on the attached ANSWER SHEETS using drawing instruments where necessary.
14. Write your NAME on every ANSWER SHEET and hand them in with your ANSWER BOOK, whether you have answered the question or not.
15. Owing to electronic transfer, drawings in the question paper are NOT to scale.
16. Google images was used as the source of all photographs and pictures.
17. Write neatly and legibly.

Copyright reserved

Hosted by www.ecexams.co.za.
Downloaded from Grade12pastexampapers.co.za

QUESTION 1: SAFETY AND MATERIALS (GENERIC)

Start this question on a NEW page.

1.1 Choose the correct requirements regarding scaffolding:

1.1.1 It must have a safety factor of at least **2 / 4** (1)

1.1.2 The width of the wooden scaffold platform is at least **114 mm / 228** mm (1)

1.1.3 Guard rails must be at least **750 mm / 900 mm** high (1)

1.1.4 Toe-boards must be at least **150 mm / 1 500 mm** high (1)

1.1.5 Platforms must have a **non-slip layer / rust-free layer** (1)

1.2 Motivate why suspended scaffolding should be as near as possible to the structure where work is being done. (1)

1.3 Identify THREE of the regulations below that apply to the supplier of hazardous chemical substances.

1.3.1 First-aid measures must be indicated

1.3.2 The supplier of the containers must be indicated

1.3.3 Emergency contact numbers must be indicated

1.3.4 Fire-fighting measures must be indicated

1.3.5 Transport information must be indicated

1.3.6 Storage instructions must be indicated (3 x 1) (3)

1.4 What is the minimum and maximum slope of the stairs used during the construction process? (2)

1.5 Briefly motivate why aluminium ladders must not be used close to electrical wires. (2)

1.6 Describe the difference between the type of surface finish of a water-based paint and an oil-based paint. (2)

1.7 Name THREE advantages of the curing process of concrete. (3 x 1) (3)

1.8 Briefly describe the process of powder coating. (2)

[20]

Hosted by www.ecexams.co.za.
Downloaded from Grade12pastexampapers.co.za

QUESTION 2: GRAPHICS, JOINING AND EQUIPMENT (GENERIC)

Start this question on a NEW page.

2.1 Use the information on ANSWER SHEET A and complete the site plan on a scale of 1 : 200 according to the following requirements:

2.1.1 The site boundaries are measured from point **A**
The site boundaries in front and back are 23 m long
The site boundaries on the sides are 25 m long (2)

2.1.2 The front building line is 4 m from the site boundary
The back and side building lines are 2 m from the site boundaries (2)

2.1.3 Show the site entrance, 3 m from the western site boundary (1)

2.1.4 Show the datum level in the north-eastern corner of the site (1)

Complete the sewage lay-out and abbreviations of the sewage appliances according to the following requirements:

2.1.5 The main sewage from the bathroom to the municipal connection (2)

2.1.6 The branch sewage to the bathroom and kitchen (2)

2.1.7 Manhole on the site, before the municipal connection (2)

2.1.8 Rodding eyes (4)

2.1.9 Inspection eyes (4)

2.2 Name the FOUR particulars of a bolt which must be provide when it is purchased. (4 x 1) (4)

2.3 Briefly describe the advantage of the square shoulder bolt. (2)

2.4 Name parts **A** to **D** of the bolt in FIGURE 2.4.

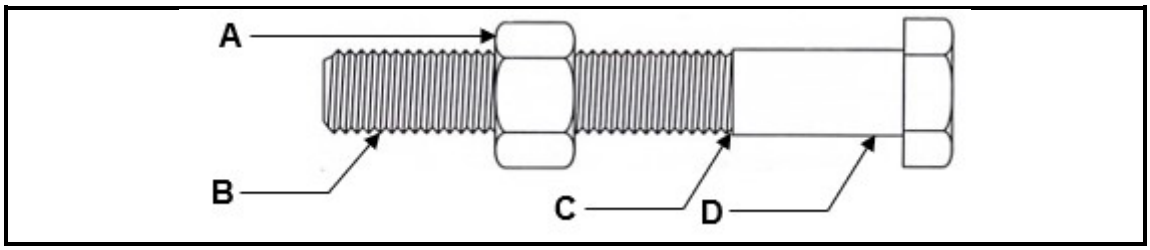

FIGURE 2.4

(4 x 1) (4)

2.5 Name TWO requirements to which a trestle scaffold must comply before employees use it. (2 x 1) (2)

Hosted by www.ecexams.co.za.
Downloaded from Grade12pastexampapers.co.za

2.6 Name TWO precautionary measures which must be taken when transporting a ladder. (2 x 1) (2)

2.7 Briefly motivate why wooden ladders must not be painted. (2)

2.8 Briefly describe ONE use of the dumpy level. (1 x 2) (2)

2.9 Name TWO materials that can be detected in walls by a multi-detector. (2 x 1) (2)

[40]

Hosted by www.ecexams.co.za.
Downloaded from Grade12pastexampapers.co.za

QUESTION 3: ROOFS, STAIRCASES AND JOINING (SPECIFIC)

Start this question on a NEW page.

3.1 Draw in good proportion, a neat sketch of a collar tie roof truss with a pitch of 45° resting on two supporting walls.

Show the following on your drawing:

- Walls
- Wall plates
- Rafters
- Collar beam/Collar tie
- Ridge beam (10)

3.2 What is the minimum pitch of a roof when class A corrugated iron sheeting is used to cover a roof? (1)

3.3 State the maximum distance for the spacing between roof trusses for corrugated iron roof sheeting. (1)

3.4 Give ONE word/term for EACH of the following descriptions by choosing a word/term from the list below. Write only the word/term next to the question numbers (3.4.1 to 3.4.5) in your ANSWER BOOK, for example 3.4.6 Riser.

run; landing; nosing; going/tread; apron; riser; pitch line; baluster; handrail; stairwell

3.4.1 The vertical distance between two consecutive treads (1)

3.4.2 Vertical posts that hold up the handrail (1)

3.4.3 The flat, horizontal surface of a step on which one walks when descending or ascending a staircase (1)

3.4.4 The top horizontal area on top of a staircase (1)

3.4.5 The horizontal distance covered by the stairs (1)

3.5 What are the width and thickness measurements of a purlin for corrugated iron roof sheeting? (2 x 1) (2)

Hosted by www.ecexams.co.za.
Downloaded from Grade12pastexampapers.co.za

3.6 FIGURE 3.6 below shows the formwork for a concrete staircase. Study the figure and answer the following questions.

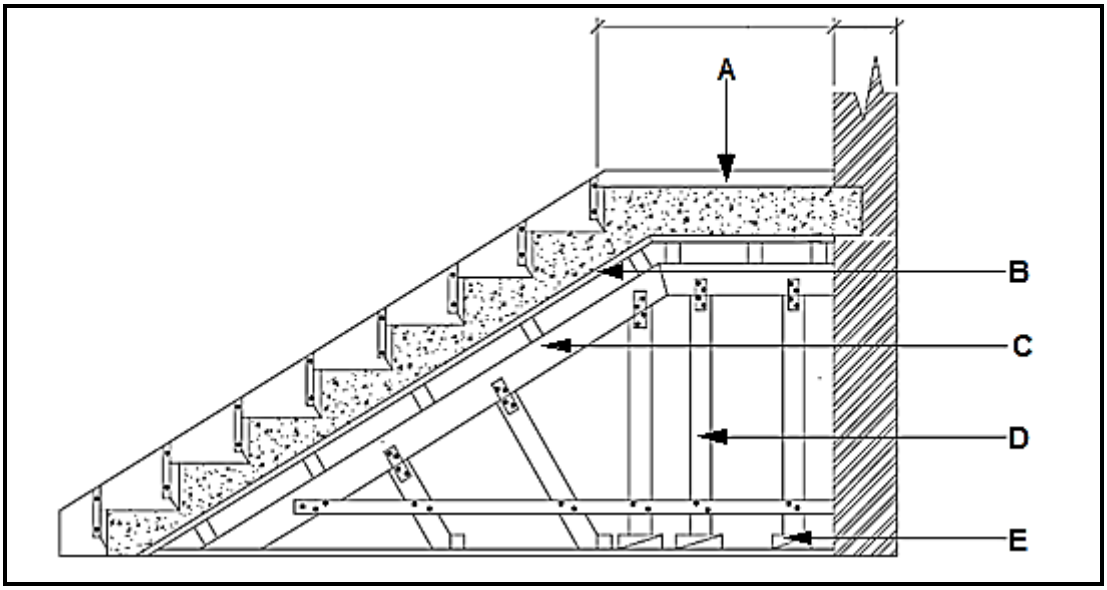

FIGURE 3.6

3.6.1 Name the parts labelled **A** to **E**. (5 x 1) (5)

3.6.2 What is the minimum distance between the handrail and the tread? (1)

3.7 Explain ONE method of joining the following materials:

3.7.1 Roof trusses to a brick wall (1)

3.7.2 Wall plate to a brick wall (1)

3.7.3 Metal to another metal (1)

3.7.4 Metal to concrete (1)

3.7.5 Handrails mounted onto a wall (1)

[30]

Hosted by www.ecexams.co.za.
Downloaded from Grade12pastexampapers.co.za

QUESTION 4: MATERIAL, EXCAVATIONS, FOUNDATIONS, EQUIPMENT AND TOOLS (SPECIFIC)

Start this question on a NEW page.

4.1 Choose a description from COLUMN B that matches best with an item in COLUMN A. Write only the letter (A–I) next to the question numbers (4.1.1 to 4.1.6) in the ANSWER BOOK, for example 4.1.7 K.

COLUMN A		COLUMN B	
4.1.1	Perspex	A	ferrous metal
4.1.2	Cube test	B	dipped in molten zinc
4.1.3	Aluminium	C	tested in a laboratory
4.1.4	Polystyrene	D	non-ferrous metal
4.1.5	Slump test	E	basic sealant
4.1.6	Ductile cast iron	F	tested on the site
		G	packaging material
		H	alternative for glass
		I	highly toxic

(6 x 1) (6)

4.2 Answer the following questions regarding the test in FIGURE 4.2.

FIGURE 4.2

4.2.1 Identify this type of test method. (1)

4.2.2 Name TWO reasons why this test is done on concrete. (2 x 1) (2)

4.2.3 Identify ONE type of tool used in FIGURE 4.2. (1 x 1) (1)

Hosted by www.ecexams.co.za.
Downloaded from Grade12pastexampapers.co.za

4.3 Name any TWO methods for the curing of concrete. (2 x 1) (2)

4.4 Explain the purpose of cladding for buildings. (2)

4.5 Name THREE types of materials that can be used for the cladding of a building. (3 x 1) (3)

4.6 Answer the following questions regarding the construction machine in FIGURE 4.6.

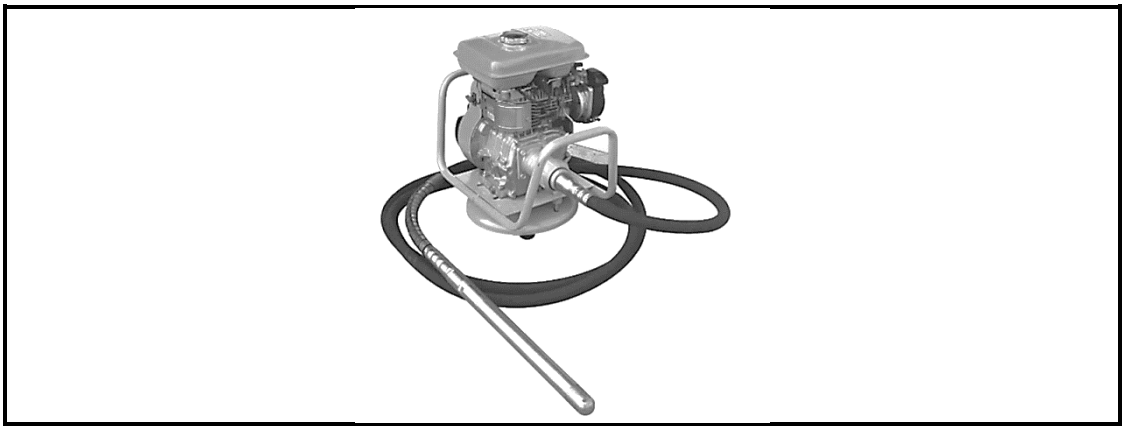

FIGURE 4.6

4.6.1 Identify the type of machine. (1)

4.6.2 Name ONE purpose of this machine. (1 x 1) (1)

4.6.3 Name TWO ways of maintaining the machine. (2 x 1) (2)

4.7 Identify the following statements as TRUE or FALSE.

4.7.1 At excavations all workers must wear hard hats. (1)

4.7.2 No person is allowed to work on their own at an excavation site. (1)

4.7.3 Ladders or scaffolding must be used for accessing deep trenches. (1)

4.7.4 Weekly inspections are necessary at excavations. (1)

4.8 Name THREE causes for the collapse of an excavation. (3 x 1) (3)

4.9 Name TWO ways of making excavations safe at night. (2 x 1) (2)

4.10 Provide the MEASUREMENT in the following statements of excavations.

4.10.1 From what depth should bracing be used? (1)

4.10.2 From what depth should testing be done for atmospheric gasses? (1)

4.10.3 How far should excavated soil be away from the excavation? (1)

Hosted by www.ecexams.co.za.
Downloaded from Grade12pastexampapers.co.za

4.11 Choose the correct answer from the block below for the following foundation descriptions.

strip foundation; stepped foundation; block foundation; raft foundation; pile foundation

4.11.1 The depth of the foundation is more than three times its width (1)

4.11.2 Used where sites are not level (1)

4.11.3 Continuous concrete strip that is casted in a trench (1)

4.11.4 The strip foundations and the floor slab are combined (1)

4.12 Name any THREE advantages of using pile foundations. (3 x 1) (3)

[40]

Hosted by www.ecexams.co.za.
Downloaded from Grade12pastexampapers.co.za

QUESTION 5: BRICKWORK, GRAPHICS, PLASTER AND SCREED (SPECIFIC)

Start this question on a NEW page.

5.1 The pictures in FIGURE 5.1 below show steps of a building process. Study the pictures and answer the following questions.

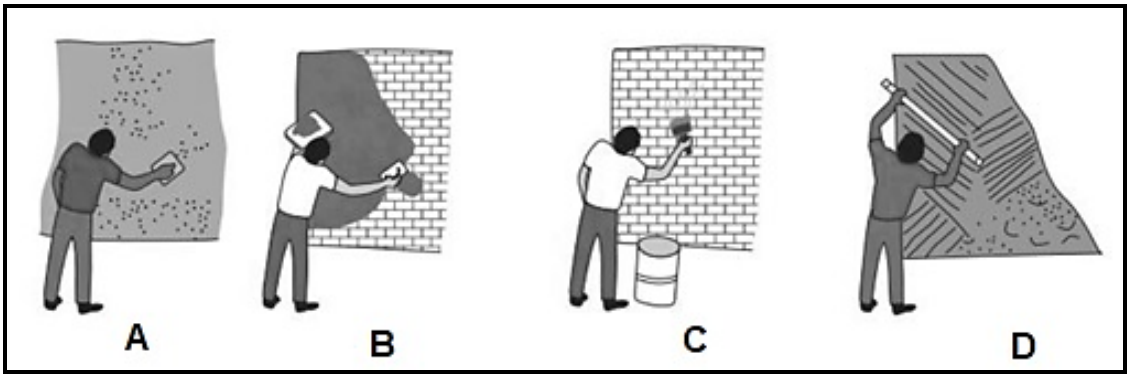

FIGURE 5.1

5.1.1 Re-arrange the pictures for this building process in the CORRECT order from start to finish, using the letters **A** to **D** and give a short description of what is being done in EACH picture. (4 x 2) (8)

5.1.2 Explain why the process in **C** is necessary. (1)

5.1.3 Name the admixture that can be added to the material to enhance the plasticity of the mixture. (1)

5.2 Explain the following terms that apply to paving:

5.2.1 Jointing (1)

5.2.2 Bedding sand (1)

5.2.3 Walkways (1)

5.3 Draw, in good proportion, neat freehand sketches of the following paving types in your ANSWER BOOK. The paving must be laid from a corner to create a pattern.

5.3.1 Basket-weave paving pattern (5)

5.3.2 Herringbone paving pattern (5)

Hosted by www.ecexams.co.za.
Downloaded from Grade12pastexampapers.co.za

5.4 FIGURE 5.4 shows the front view of a cavity wall.

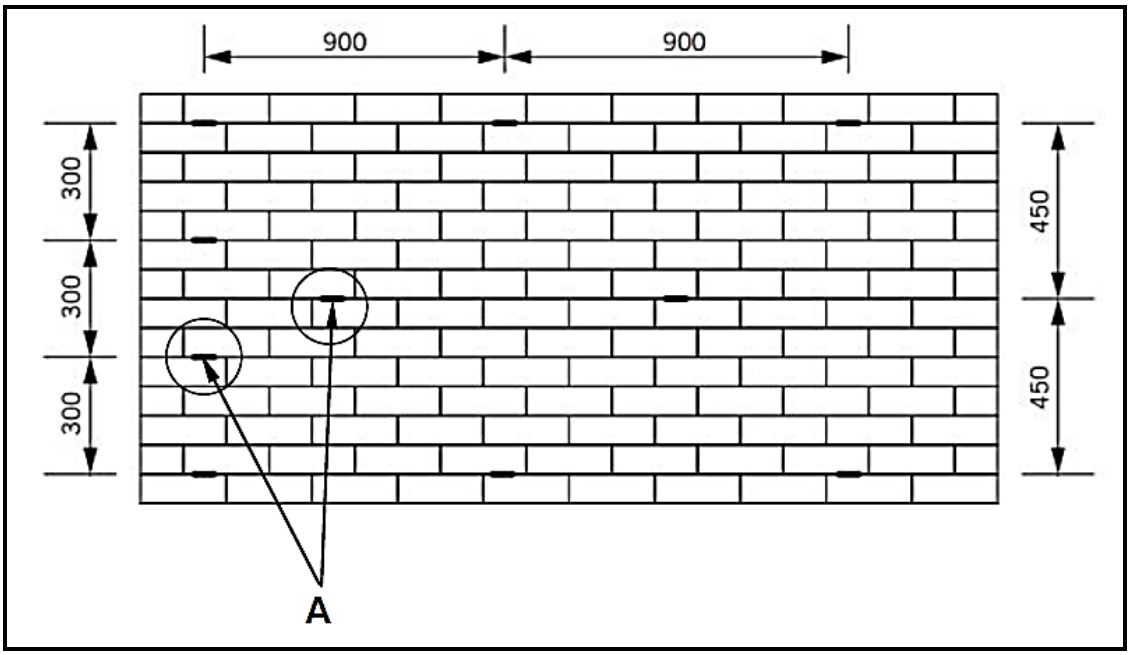

FIGURE 5.4

5.4.1 Why is there a need for the darkened and circled part **A**? (1)

5.4.2 Describe ONE position where the weep holes in a cavity wall should be positioned. (1 x 1) (1)

5.4.3 Explain ONE purpose of a weep hole. (1 x 1) (1)

5.5 Draw in your ANSWER BOOK, a neat sketch of the horizontal section of a steel door frame built into a half-brick wall, with face bricks and plastered on one side. (4)

[30]

Hosted by www.ecexams.co.za.
Downloaded from Grade12pastexampapers.co.za

QUESTION 6: FORMWORK, REINFORCING, FOUNDATIONS, CONCRETE FLOOR AND QUANTITIES (SPECIFIC)

Start this question on a NEW page.

6.1 Name ONE material that can be used to line the formwork, to obtain a smoother finish. (1 x 1) (1)

6.2 Study the following pictures and answer the questions that follow.

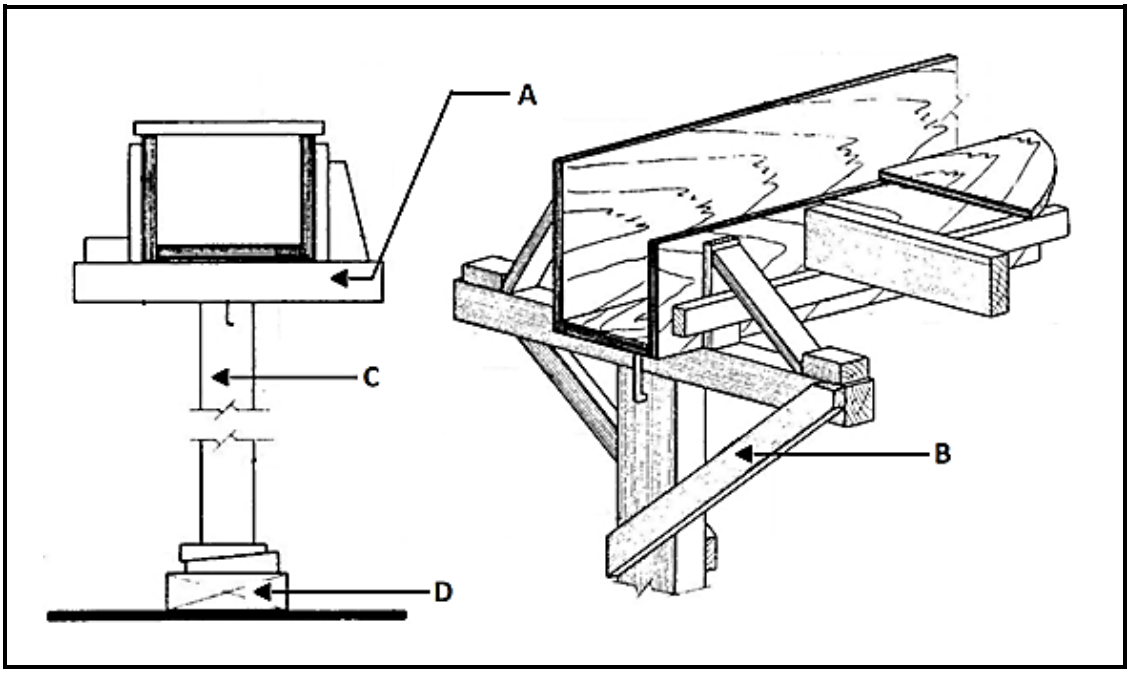

FIGURE 6.2

Name the parts **A** to **D** of the formwork in FIGURE 6.2. (4 x 1) (4)

6.3 Answer the following questions regarding the bar code for steel reinforcement: **16R10-02-200**.

6.3.1 What type of steel is used? (1)

6.3.2 What is the spacing of the bars? (1)

6.3.3 What is the diameter of the bars? (1)

6.4 What forces are being counteracted by the following parts in concrete beam:

6.4.1 Anchor bar (1)

6.4.2 Stirrups (1)

Hosted by www.ecexams.co.za.
Downloaded from Grade12pastexampapers.co.za

6.5 Name ONE method of joining steel bars with wire. (1 x 1) (1)

6.6 Name TWO purposes of the cover depth at the reinforcing of concrete work. (2 x 1) (2)

6.7 Name TWO types of pile foundations. (2 x 1) (2)

6.8 Name THREE reasons for the use of pile foundations. (3 x 1) (3)

6.9 Answer the following questions with regard to the concrete floor in FIGURE 6.9.

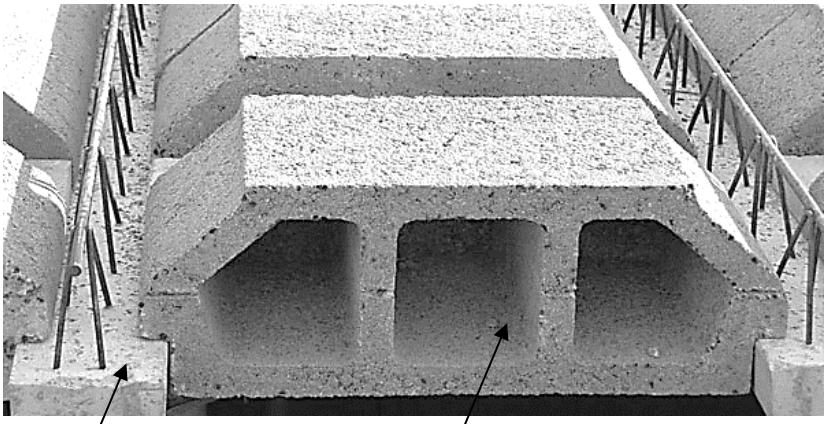

FIGURE 6.9

6.9.1 Name parts **A** and **B**. (2 x 1) (2)

6.9.2 Name ONE disadvantage of this type of floor construction. (1 x 1) (1)

Hosted by www.ecexams.co.za.
Downloaded from Grade12pastexampapers.co.za

6.10 FIGURE 6.10 shows a floorplan of a garage with a gable roof, a north elevation and a king post roof truss.
Use the specifications provided and answer the following questions on ANSWER SHEET B.

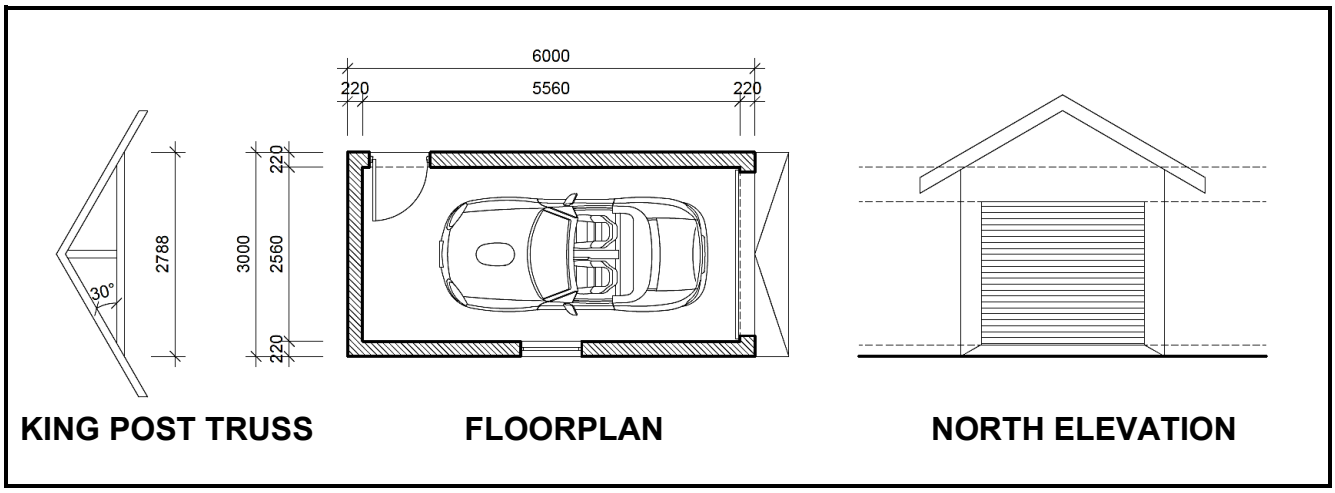

FIGURE 6.10

Use the following specifications:

- Walls are all 220 mm thick
- Type of roof – King post roof truss
- Pitch of roof truss – 30°
- Members of roof truss are joined by gang nails
- Corrugated roof sheeting is used
- Measurement between centres of roof trusses is 1 200 mm
- Length of the corrugated iron roof sheet is 2 490 mm with a cover width of 610 mm
- Dimensions of wood used for wood trusses is 114 mm x 38 mm
- True dimensions of the parts of the roof truss:
  - Tie beam = 2 788 mm
  - Rafter = 2 440 mm
  - King post = 800 mm
- Centre-to-centre spacing between the 76 mm x 50 mm purlins is 1 130 mm
- Length of one ridge capping is 1 800 mm
- Overhang of the roof at the gable ends is 150 mm
- Overhang of the roof at the fascia board ends is 600 mm

6.10.1 Calculate the length of the wall plate. (3)

6.10.2 Calculate the number of roof trusses. (6)

6.10.3 Calculate the number of purlins. (4)

6.10.4 Calculate the length of fascia board. (6)
[40]

TOTAL: 200

Hosted by www.ecexams.co.za.
Downloaded from Grade12pastexampapers.co.za

ANSWER SHEET	A	CIVIL TECHNOLOGY (GENERIC)	NAME AND SURNAME:	

2.1 Use the information on ANSWER SHEET A and complete the site plan on a scale of 1 : 200.

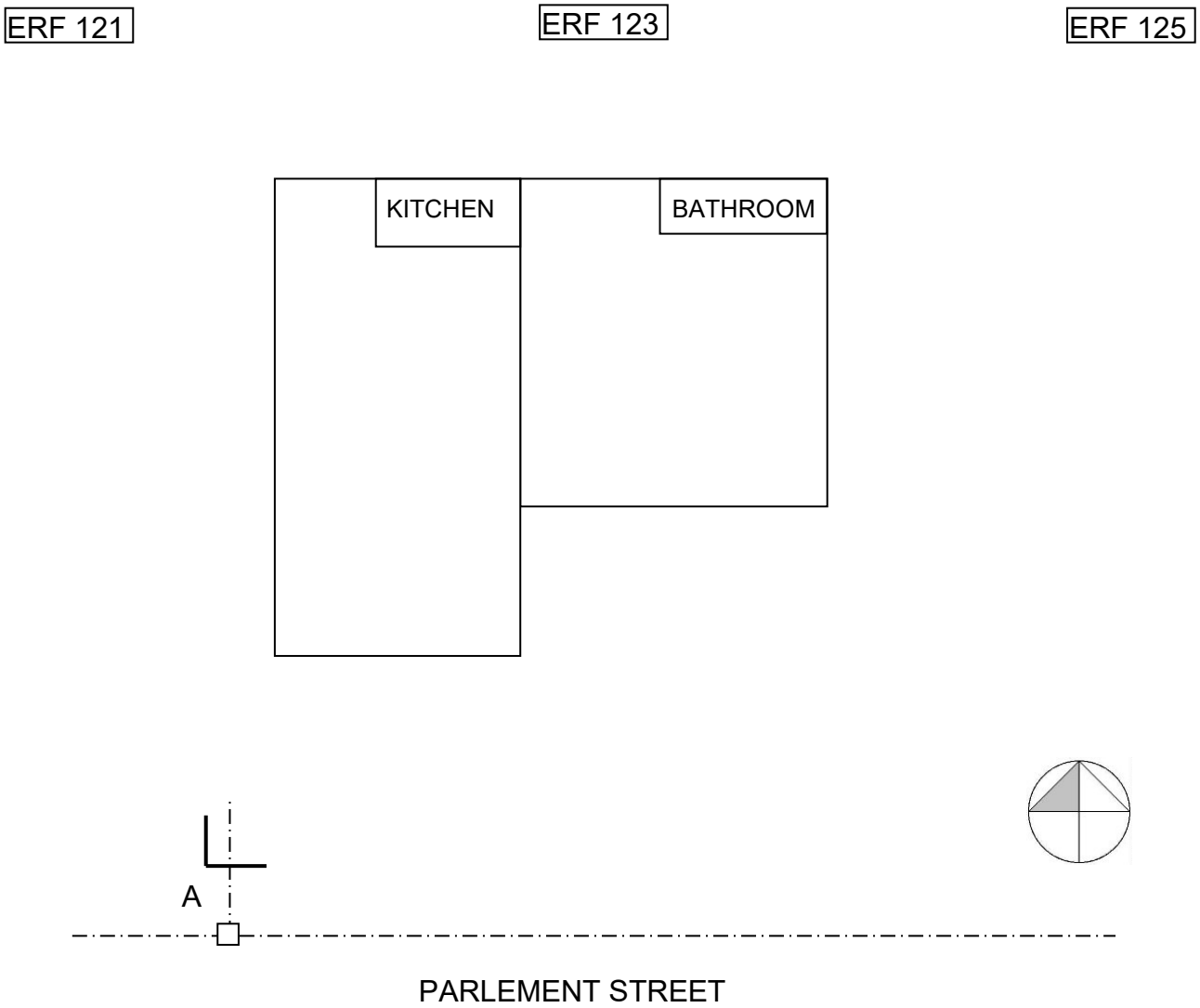

Site boundaries	2	
Building lines	2	
Site entrance	1	
Datum level	1	
Main sewerage	2	
Branch sewerage	2	
Manhole	2	
Rodding eyes	4	
Inspection eyes	4	
TOTAL:	**20**	

Hosted by www.ecexams.co.za.
Downloaded from Grade12pastexampapers.co.za

ANSWER SHEET	B	CIVIL TECHNOLOGY (SPECIFIC)	NAME AND SURNAME:	

A	B	C	D	A	B	C	D
6.10.1				6.10.3			
Wall plate needed between gable walls:				Number of purlins needed:			
			(3)				(4)
6.10.2				6.10.4			
Number of roof trusses needed:				Length of fascia board needed:			
			(6)				(6)
PAGE 1				PAGE 2			

Copyright reserved

Hosted by www.ecexams.co.za.
Downloaded from Grade12pastexampapers.co.za