Province of the
EASTERN CAPE
EDUCATION

NATIONAL SENIOR CERTIFICATE

GRADE 12

SEPTEMBER 2023

CIVIL TECHNOLOGY: CIVIL SERVICES

MARKS: **200**

TIME: **3 hours**

This question paper consists of 18 pages, including 2 answer sheets.

Downloaded from Grade12pastexampapers.co.za

REQUIREMENTS:

1. Drawing instruments
2. A non-programmable pocket calculator
3. ANSWER BOOK

INSTRUCTIONS AND INFORMATION

1. This question paper consists of SIX questions: TWO questions are generic and FOUR questions are subject specific.
2. Answer ALL the questions.
3. Answer each question as a whole. Do NOT separate subsections of questions.
4. Number the answers correctly according to the numbering system used in this question paper.
5. Start the answer to EACH question on a NEW page.
6. Do NOT write in the margins of the ANSWER BOOK.
7. You may use sketches to illustrate your answers.
8. Write ALL calculations and answers in the ANSWER BOOK or on the attached ANSWER SHEETS.
9. Use the mark allocation as a guide to the length of your answers.
10. Make drawings and sketches in pencil, fully dimensioned and neatly finished off with descriptive titles and notes to conform to the *SANS/SABS Code of Practice for Building Drawings.*
11. For the purpose of this question paper, the size of a brick should be taken as 220 mm x 110 mm x 75 mm.
12. Use your own discretion where dimensions and/or details have been omitted.
13. Answer QUESTIONS 2.2 and 6.1 on the attached ANSWER SHEETS using drawing instruments where necessary.
14. Write your NAME on every ANSWER SHEET and hand them in with your ANSWER BOOK, whether you have answered the question or not.
15. Owing to electronic transfer, drawings in the question paper are NOT to scale.
16. Write neatly and legibly.

Copyright reserved

Downloaded from Grade12pastexampapers.co.za

QUESTION 1: SAFETY AND MATERIALS (GENERIC)

Start this question on a NEW page.

1.1 What is the aim of the Occupational Health and Safety Act (Act 85 of 1993) (OHS Act)? (1)

1.2 Name the TWO main causes of accidents. (2 x 1) (2)

1.3 Name ONE reason why scaffolding should be inspected, before it can be used. (1)

1.4 Answer the following questions with regard to the scaffolding in FIGURE 1.4.

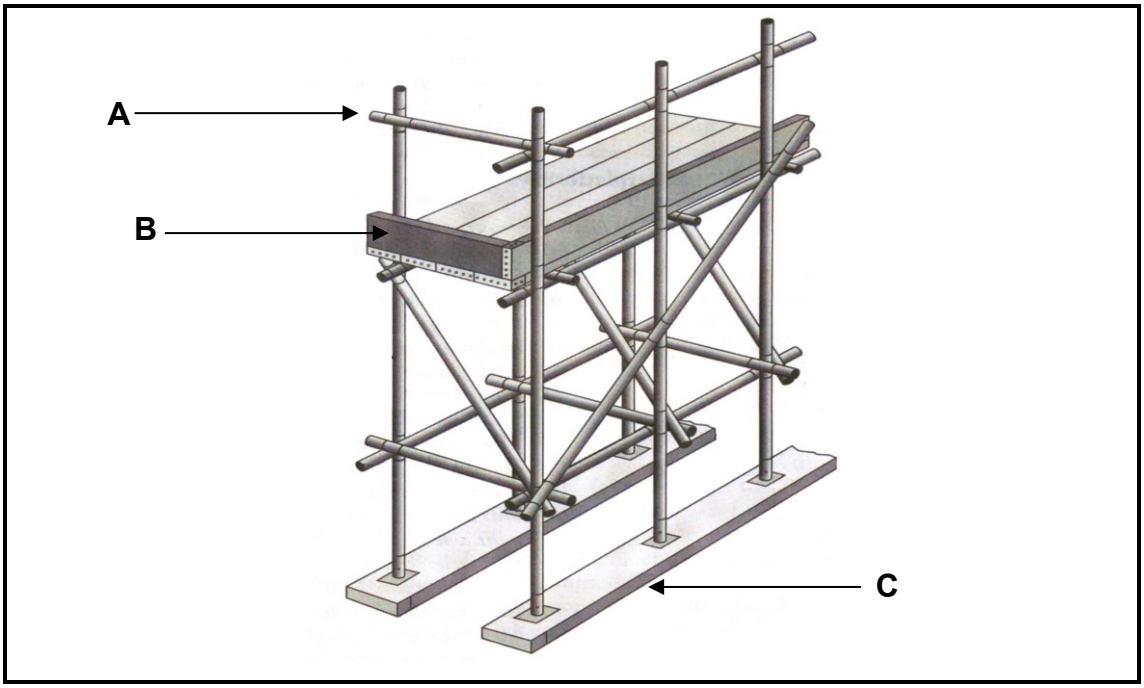

FIGURE 1.4

1.4.1 Name the parts **A** to **C**. (3 x 1) (3)

1.4.2 Is this a dependant **or** an undependant scaffolding? (1)

1.4.3 What is the maximum height that part **A** must be from the platform? (1)

1.5 Answer the following questions regarding the regulations on a construction site.

1.5.1 Name ONE way to transport waste material from higher levels in a building to the ground level. (1 x 1) (1)

1.5.2 If work is done above an entrance, what will prevent materials from falling on workers below? (1)

Downloaded from Grade12pastexampapers.co.za

1.6 Indicate whether the following statements are TRUE or FALSE.

1.6.1 Trestle scaffold is used on heights greater than 3 m. (1)

1.6.2 No stack height should exceed three times the width of the material. (1)

1.6.3 Aluminium ladders can be used in the proximity of electrical wires. (1)

1.6.4 The horizontal part of a ladder is called a stile.

1.7 Name the TWO main groups into which paint can be divided. (2 x 1) (2)

1.8 What is the purpose of galvanising? (1)

1.9 Name TWO advantages of curing (concrete). (2 x 1) (2)

[20]

Downloaded from Grade12pastexampapers.co.za

QUESTION 2: GRAPHICS, JOINING AND EQUIPMENT (GENERIC)

Start this question on a NEW page.

2.1 Identify SIX of the descriptions below which are applicable to the checklist of a floor plan.

- Window numbers
- Building lines
- Plot number
- Door swings
- Names of rooms
- Ground contours
- Stair directions
- Sliding doors
- Street number
- Water connection point
- Position of proposed building
- Floor covering (6 x 1) (6)

2.2 FIGURE 2.2 on ANSWER SHEET A shows the incomplete elevation of a building. Complete the elevation by drawing in the following parts on scale 1 : 50.

2.2.1 A window with a length of 1 800 mm and a height of 900 mm. The window is built in 700 mm from the right-hand side and one-third of the right side of the window can open. (7)

2.2.2 A door according to standard measurements, 900 mm from the left side of the building. The door opens to the left. There is one step to the ground level. (5)

2.2.3 The barge board against the gable end. (2)

2.3 Identify the appliances which are illustrated by the following drawing symbols.

2.3.1 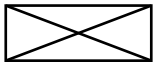 (1)

2.3.2 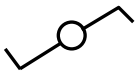 (1)

Downloaded from Grade12pastexampapers.co.za

2.4 Make neat sketches according to standard building drawing practice to illustrate the following symbols.

2.4.1 Water meter (2)

2.4.2 Plaster (2)

2.4.3 Invert level (2)

2.5 Briefly explain the advantages of the square shoulder screw. (2)

2.6 Explain the meaning of the following code on rawl bolts: **R-RBL M06/18**. (3)

2.7 What is the purpose of the foot screws of the dumpy level? (1)

2.8 Identify the cross hairs **A** to **C** in the telescope of the dumpy level in FIGURE 2.8.

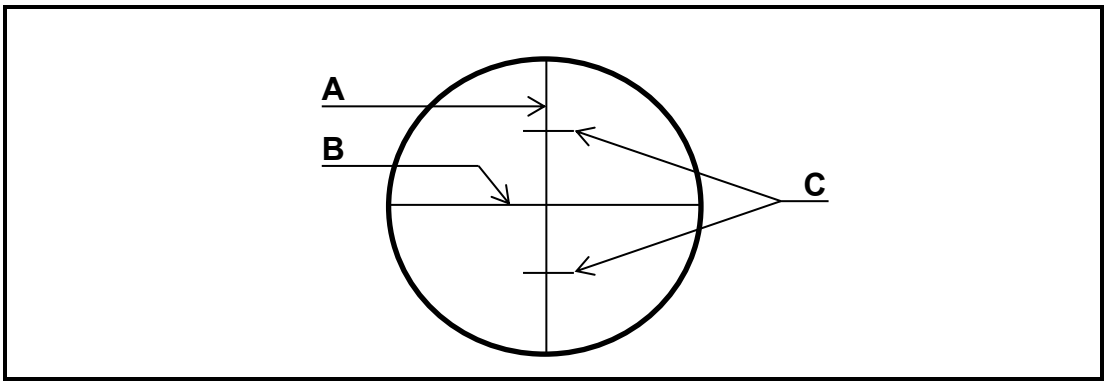

FIGURE 2.8

(3 x 1) (3)

2.9 Name TWO uses of the dumpy level. (2 x 1) (2)

2.10 Motivate briefly why labels and metal plates should be removed from the multi-detector before using the instrument. (1)

[40]

TOTAL SECTION A: 60

Downloaded from Grade12pastexampapers.co.za

QUESTION 3: SAFETY, MATERIAL AND CONSTRUCTION (SPECIFIC)

Start the question on a NEW page.

3.1 What is the responsibility of the employer when workers have to enter confined spaces? (1)

3.2 What is the purpose of a safety rope, when workers have to enter confined spaces? (1)

3.3 Study the picture below.

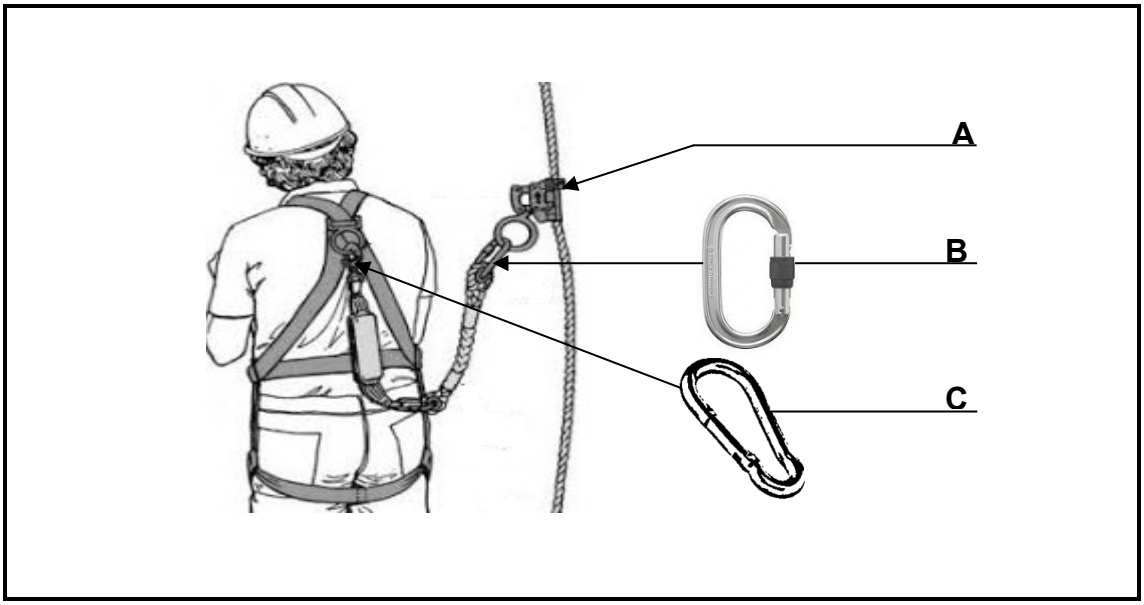

FIGURE 3.3

Identify parts **A** to **C** in the safety harness appliances in FIGURE 3.3. (3 x 1) (3)

3.4 Name TWO safety methods for manholes when the covers have to be removed. (2 x 1) (2)

3.5 Who is responsible to see to that the fall protection plan is implemented on a building site? (1)

3.6 Indicate whether the following statements as TRUE or FALSE.

3.6.1 Dezincification is used in the preparation of galvanised metals for soldering. (1)

3.6.2 Dezincification is a form of corrosion. (1)

3.6.3 Dezincification weakens brass objects. (1)

3.6.4 Water with a high oil level causes dezincification. (1)

3.6.5 Copper-zink alloys with more than 5% zinc are susceptible to dezincification. (1)

Downloaded from Grade12pastexampapers.co.za

3.7 Explain the electrolytic cleaning method of a metal surface. (5)

3.8 Answer the following questions with regard to the wall construction in FIGURE 3.8.

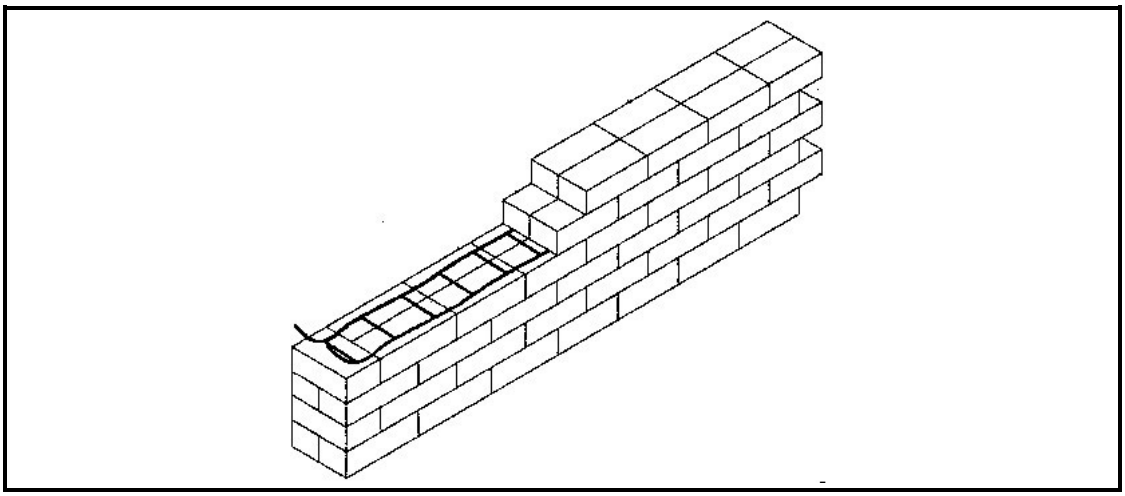

FIGURE 3.8

3.8.1 What is the thickness of the wall? (1)

3.8.2 In which brick bond is the wall built? (1)

3.8.3 What is this wall called? (1)

3.9 Name TWO construction requirements which will determine the effectiveness of the benching in a manhole. (2 x 1) (2)

3.10 Explain the difference between *hard ground* and *firm ground* when excavations are done for drainage. (2 x 2) (4)

3.11 Choose the correct answer from those in brackets for the backfill of drainage trenches. Write only the answers next to the question numbers (3.11.1 to 3.11.3) in the ANSWER BOOK.

3.11.1 Backfilling must be done in layers of not more than (150 mm / 250 mm). (1)

3.11.2 Compaction of the ground must be done in layers of (250 mm / 300 mm). (1)

3.11.3 Soil compacting is done by (rollers / spades). (1)

[30]

Downloaded from Grade12pastexampapers.co.za

QUESTION 4: COLD WATER SUPPLY, WARM WATER SUPPLY AND TOOLS (SPECIFIC)

Start this question on a NEW page.

4.1 What is the purpose of the packing gland inside the stopcock? (1)

4.2 Name THREE positions where stopcocks must be installed. (3 x 1) (3)

4.3 Identify the type of valve for each of the following descriptions.

4.3.1 The water is shut off by means of a lever. (1)

4.3.2 It works with a jumper to which a washer is fixed. (1)

4.3.3 The valve shaped like a gate that moves up and down. (1)

4.4 Answer the following questions with regard to the valve in FIGURE 4.4.

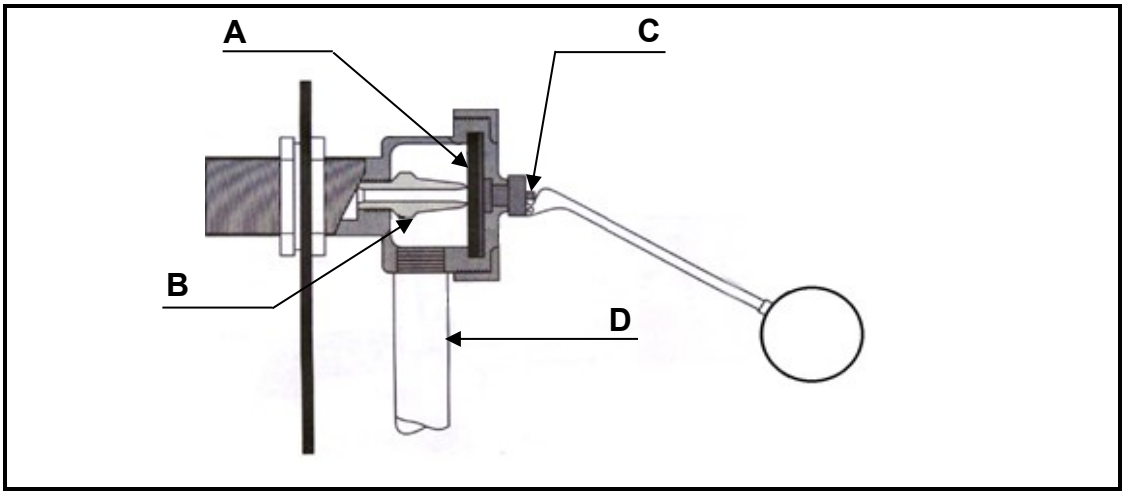

FIGURE 4.4

4.4.1 What is this valve called? (1)

4.4.2 Name the parts **A** to **D**. (4 x 1) (4)

4.4.3 Where is this valve installed? (1)

4.4.4 Explain the purpose of part **D**. (1)

4.5 Which type of valve is used in pipe connections where you do not want the water to flow back into the pipe? (1)

4.6 Briefly explain the operation of a demand pillar tap. (2)

4.7 Name TWO types of water saving shower heads. (2 x 1) (2)

Downloaded from Grade12pastexampapers.co.za

4.8 FIGURE 4.8 shows a solar water geyser with a pre-heating hot water storage tank. Answer the following questions with regard to the system.

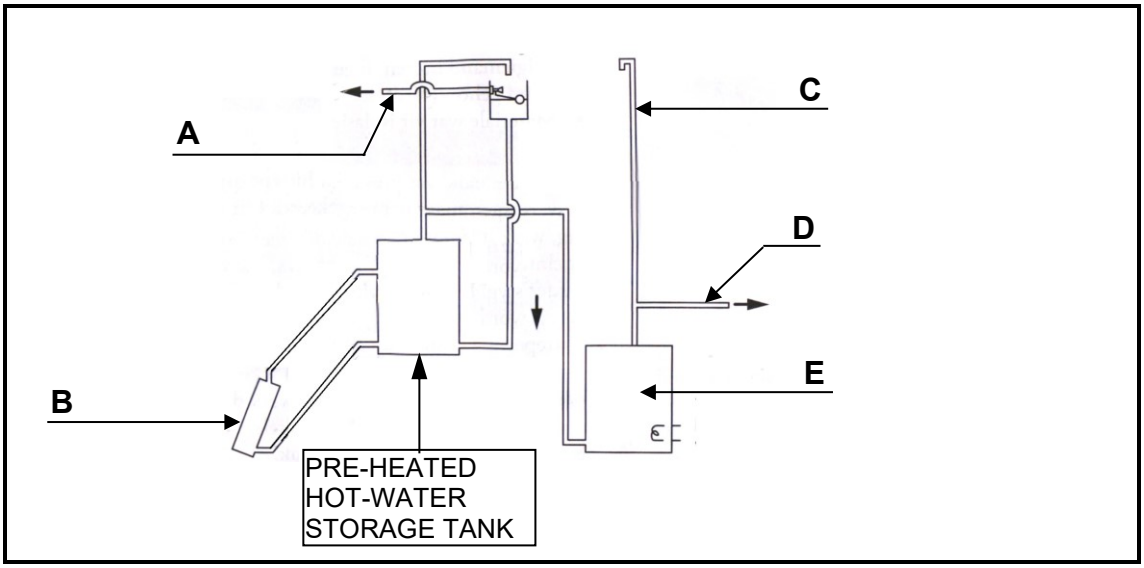

FIGURE 4.8

4.8.1 Name the parts **A** to **E** of the system. (5 x 1) (5)

4.8.2 What is the minimum angle of part **B**? (1)

4.8.3 Motivate why part **B** must face north. (1)

4.9 Indicate the following statements as TRUE or FALSE.

4.9.1 A shut-off valve is installed to the hot water outlet of the high-pressure geyser. (1)

4.9.2 The hot water pipes leading out of the geyser must be suitable to withstand water temperatures of up to 70°. (1)

4.9.3 A 200-litre geyser should not be wall-mounted. (1)

4.9.4 An electric isolator switch should be installed at least 1 metre from the geyser. (1)

4.9.5 The heating element of any water heater must be positioned close to the top of the container. (1)

4.10 Explain the working of a heat pump to heat water. (6)

Downloaded from Grade12pastexampapers.co.za

4.11 Answer the following questions with regard to the tool in FIGURE 4.11.

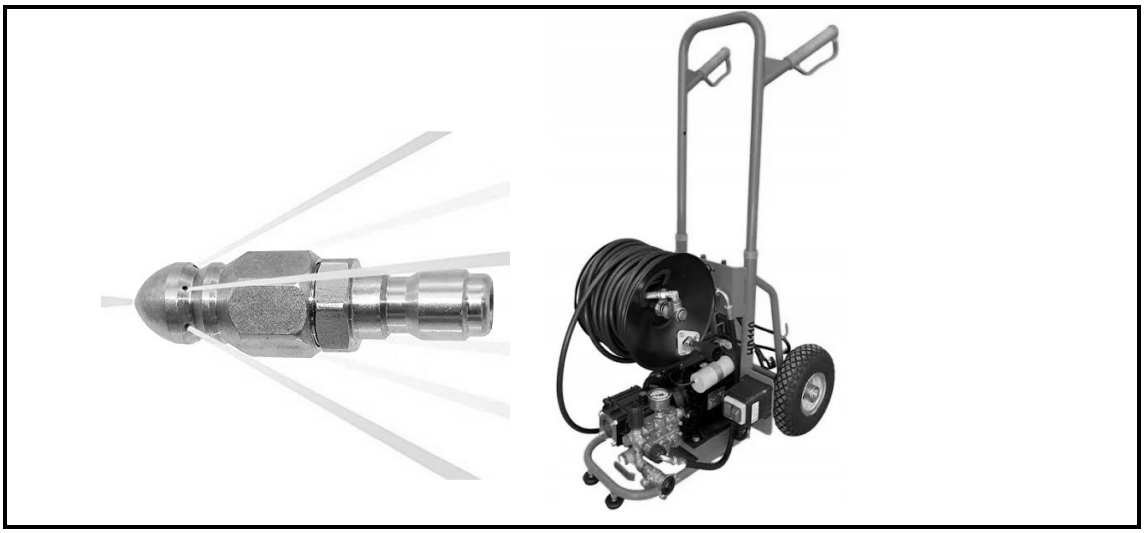

FIGURE 4.11

4.11.1 What is the use of this tool? (1)

4.11.2 Name TWO caring measures for this tool. (2 x 1) (2)

[40]

Downloaded from Grade12pastexampapers.co.za

QUESTION 5: DRAINAGE AND QUANTITIES (SPECIFIC)

Start this question on a NEW page.

5.1 Briefly explain the purpose of a ventilation system in a drainage system. (2)

5.2 Answer the following questions with regard to the sink installation in FIGURE 5.2.

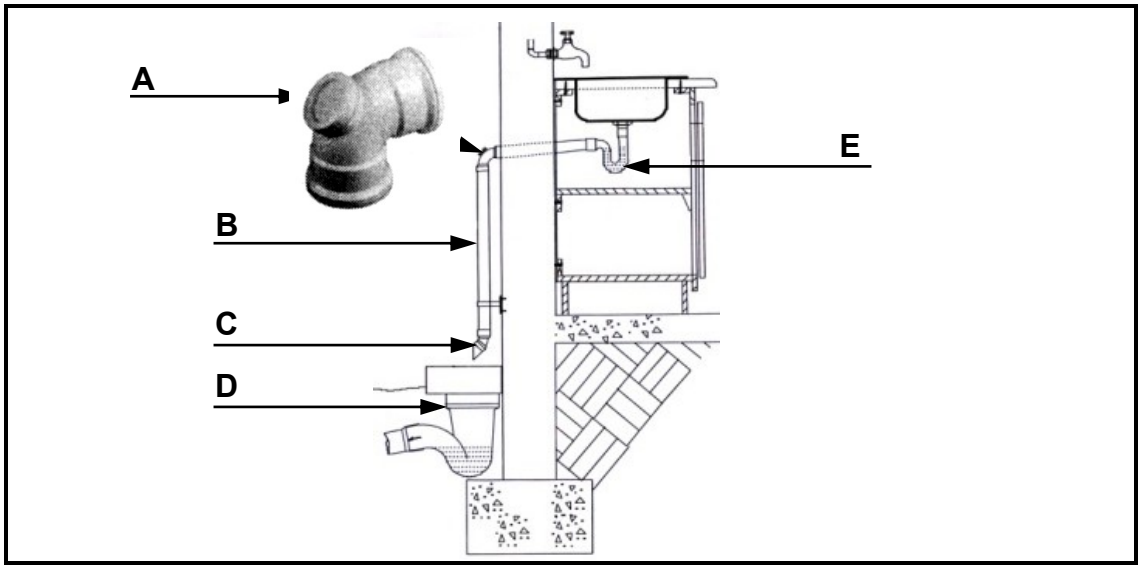

FIGURE 5.2

5.2.1 Identify the parts **A** to **E**. (5 x 1) (5)

5.2.2 What is the purpose of part **A**? (1)

5.2.3 What is the sectional size of part **B**? (1)

5.2.4 What is the purpose of part **E**? (1)

5.3 Answer the following questions with regard to the drainage system in FIGURE 5.3.

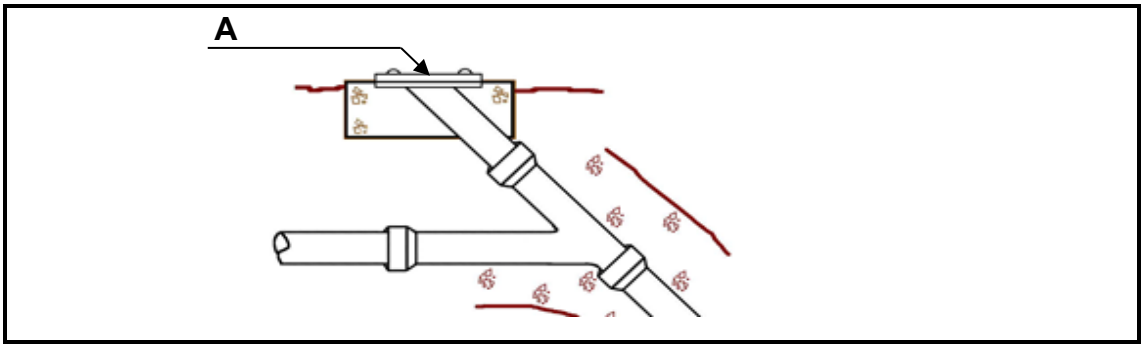

FIGURE 5.3

5.3.1 What is this system called? (1)

5.3.2 Explain the circumstances and purpose of this system. (3)

5.3.3 Name TWO disadvantages of this system. (2 x 1) (2)

Downloaded from Grade12pastexampapers.co.za

5.4 Explain the purpose of a manhole ramp. (3)

5.5 Answer the following questions with regard to the French drain in FIGURE 5.5.

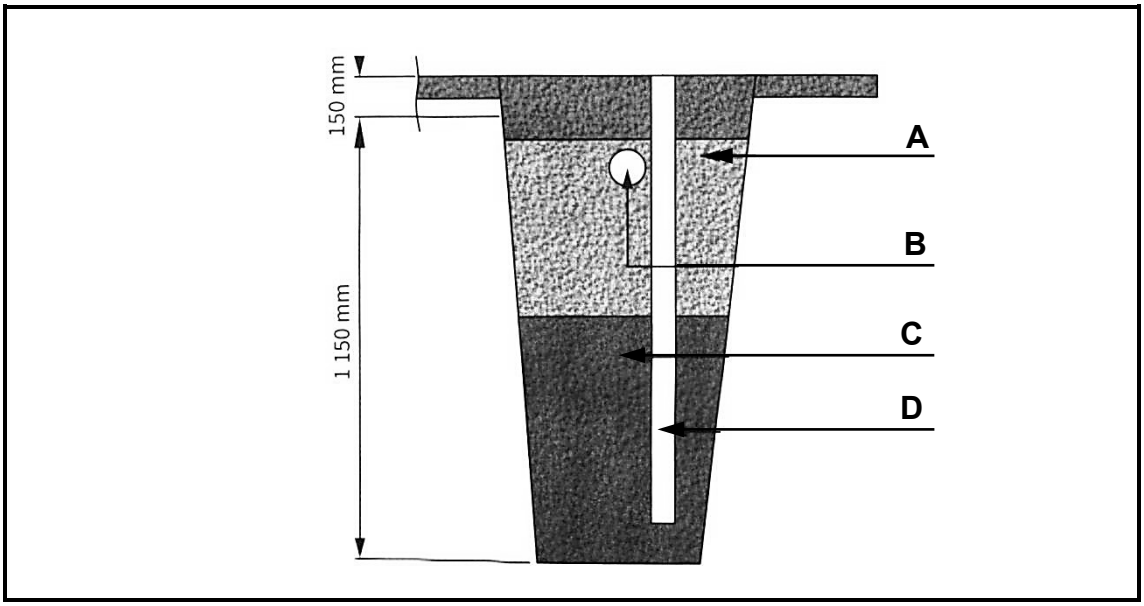

FIGURE 5.5

5.5.1 Name the parts **A** to **D** of this system. (4 x 1) (4)

5.5.2 Briefly motivate why French drains must not be excavated close to boreholes. (1)

5.5.3 Explain why stormwater must not be channelled into French drains. (2)

5.6 Give the colour code for the following drainage fittings.

5.6.1 Soil pipes (1)

5.6.2 Stormwater drains (1)

5.6.3 All existing drains (1)

5.7 Briefly explain why drainage pipes must be laid at a stipulated gradient. (1)

Downloaded from Grade12pastexampapers.co.za

5.8 FIGURE 5.8 shows a line diagram of the cold- and hot-water supply for a building. The cold-water pipe to the geyser has a diameter of 22 mm. The hot-water pipe from the geyser has a diameter of 22 mm and the branch pipes for the hot-water have a diameter 15 mm. Use the information in the table below and determine the quantity material **5.8.1** to **5.8.10** which is needed for the hot-water installation.

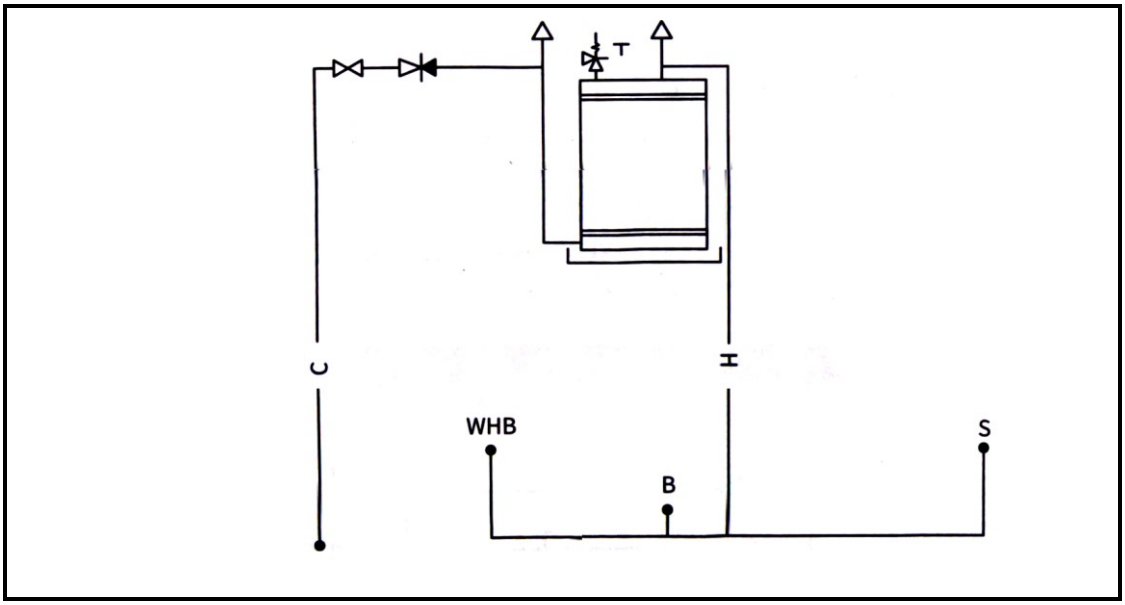

FIGURE 5.8

SANITARY WARE / FITTING	MATERIAL	SIZE	QUANTITY
Temperature and pressure safety valve with overflow	**5.8.1**		**5.8.2**
Vacuum-relief valve	**5.8.3**		**5.8.4**
Pressure-control valve	**5.8.5**		1
Drip tray	**5.8.6**		1
Cold-water pipe	**5.8.7**	22 mm	17 300 mm
Hot-water branch pipe	Copper	**5.8.8**	
Compression tees	Copper	22 mm x 22 mm	**5.8.9**
Reducing tee	Copper	**5.8.10**	1

(10 x 1) (10)

[40]

Downloaded from Grade12pastexampapers.co.za

QUESTION 6: GRAPHIC COMMUNICATION, ROOF WORK, STORMWATER AND JOINING (SPECIFIC)

Start this question on a NEW page.

6.1 FIGURE 6.1 on ANSWER SHEET B shows the top and front elevation of a cone. Draw the development of the cone according to the radial-line method on ANSWER SHEET B. Show ALL construction lines. (7)

6.2 Name the parts **A** to **C** of the gutter system in FIGURE 6.2.

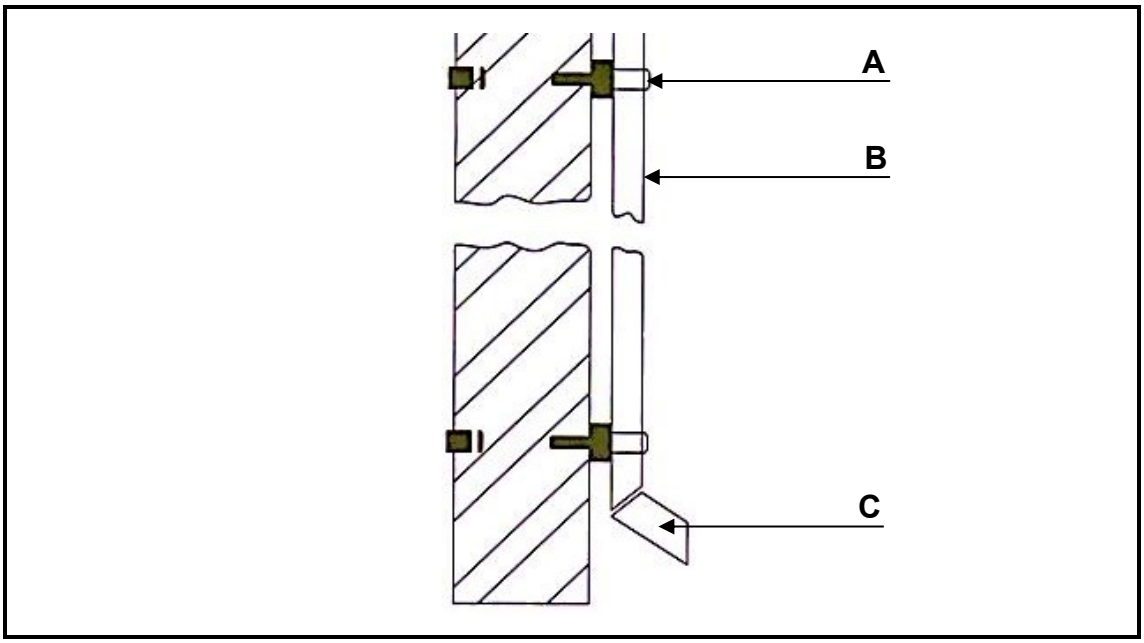

FIGURE 6.2

(3 x 1) (3)

6.3 Indicate the following statements as TRUE or FALSE.

6.3.1 Galvanised gutters must have a pitch of 25 mm for every 5,8 m. (1)

6.3.2 Gutters are mounted with brackets to the roof covering. (1)

6.3.3 The front edge of the gutter is secured with spring hooks. (1)

6.3.4 The seams of galvanised gutters are soldered with a 50/50 solder. (1)

6.4 Which tools are used to cut PVC gutters accurate to the required lengths? (2 x 1) (2)

6.5 With what will gutter ends be sealed off? (1)

6.6 Name TWO types of material which are used for flushings. (2 x 1) (2)

6.7 Briefly explain the use and purpose of a concrete shoe in the channelling of rain water. (2)

6.8 Name TWO types of material which are illegal to direct into stormwater systems. (2 x 1) (2)

Downloaded from Grade12pastexampapers.co.za

6.9 Briefly motivate why soakaways must be constructed at least 5 m away from a building. (2)

6.10 Choose a description with regard to the fasteners from COLUMN B that matches the item in COLUMN A. Write only the correct letter (A–G) next to the question numbers (6.10.1 to 6.10.5) in the ANSWER BOOK, for example 6.10.6 H.

COLUMN A		COLUMN B	
6.10.1	Square shoulder screw	A	Has a nylon insert
6.10.2	Wing nut	B	Truss head
6.10.3	Rawl bolt	C	Is manufactured from fibre-plastic
6.10.4	Hex flange	D	Can be tightened with fingers.
6.10.5	Nylon on / Lock nut	E	The sheath expands when it is fastened
		F	Domed head
		G	Has a built-in washer

(5 x 1) (5)

[30]

TOTAL: 200

Downloaded from Grade12pastexampapers.co.za

ANSWER SHEET **A**	CIVIL TECHNOLOGY GENERIC	NAME: _____

2.2 FIGURE 2.2 on ANSWER SHEET A shows the incomplete elevation of a building. Complete the elevation by drawing in the following parts on scale 1 : 50.

2.2.1 A window with a length of 1 800 mm and a height of 900 mm. The window is built in 700 mm from the right-hand side and one-third of the right side of the window can open. (7)

2.2.2 A door according to standard measurements, 900 mm from the left-hand side of the building. The door opens to the left. There is one step to the ground level. (5)

2.2.3 The barge board against the gable end. (2)

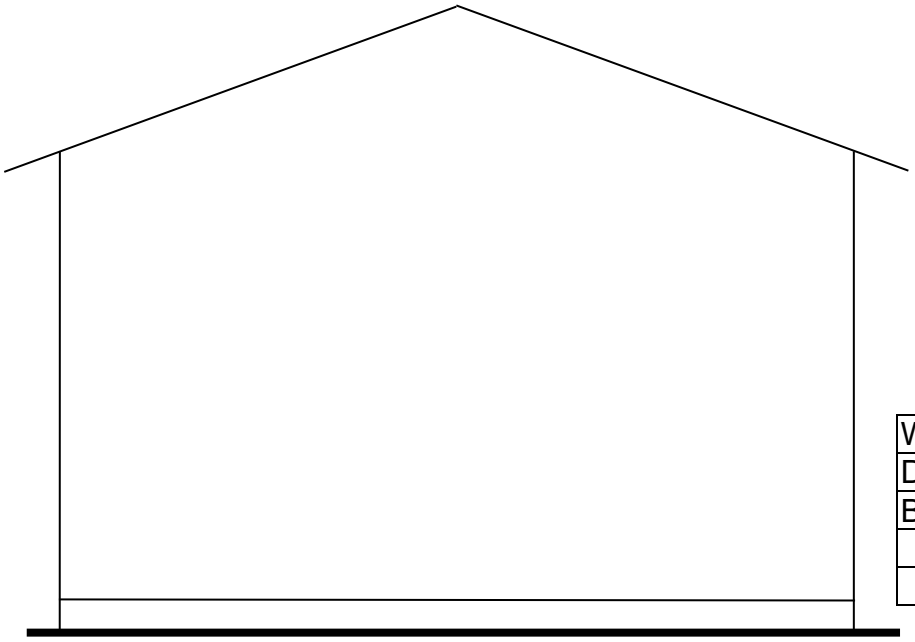

FIGURE 2.2

Window	7	
Door	5	
Barge board	2	
TOTAL	**14**	

Downloaded from Grade12pastexampapers.co.za

ANSHER SHEET **B**	CIVIL TECHNOLOGY CIVIL SERVICES	NAME: _____

6.1 FIGURE 6.1 on ANSWER SHEET B shows the top and front elevation of a cone. Draw the development of the cone according to the radial-line method on ANSWER SHEET B. Show ALL construction lines. (7)

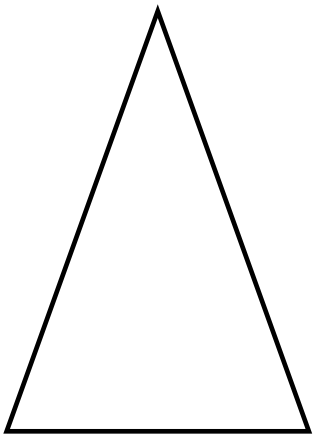

FRONT ELEVATION

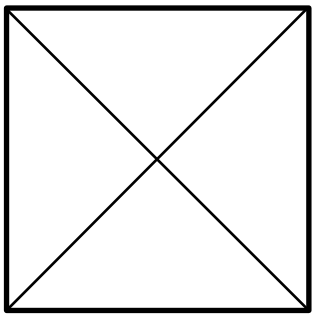

TOP ELEVATION

FIGURE 6.1

Halve circle 1 to 5	2	
Pattern lines A–1 to A–5	5	
TOTAL	**7**	

Copyright reserved

Downloaded from Grade12pastexampapers.co.za