Province of the
EASTERN CAPE
EDUCATION

NATIONAL SENIOR CERTIFICATE

GRADE 12

SEPTEMBER 2023

CIVIL TECHNOLOGY: CONSTRUCTION

MARKS: **200**

TIME: **3 hours**

This paper consists of 17 pages and 2 answer sheets.

Downloaded from Grade12pastexampapers.co.za

REQUIREMENTS:

1. ANSWER BOOK
2. Drawing instruments
3. A non-programmable pocket calculator

INSTRUCTIONS AND INFORMATION

1. This question paper consists of SIX questions: TWO questions are generic and FOUR questions are subject specific.
2. Answer ALL the questions.
3. Answer each question as a whole. Do NOT separate subsections of questions.
4. Start the answer to EACH question on a NEW page.
5. Do NOT write in the margins of the ANSWER BOOK.
6. You may use sketches to illustrate your answers.
7. Write ALL calculations and answers in the ANSWER BOOK or on the attached ANSWER SHEETS.
8. Use the mark allocation as a guide to the length of your answers.
9. Make drawings and sketches in pencil, fully dimensioned and neatly finished off with descriptive titles and notes to conform to the *SANS/SABS Code of Practice for Building Drawings.*
10. For the purpose of this question paper, the size of a brick should be taken as 220 mm x 110 mm x 75 mm.
11. Use your own discretion where dimensions and/or details have been omitted.
12. Answer QUESTIONS 2.2, 5.2 and 5.9 on the attached ANSWER SHEETS using drawing instruments where necessary.
13. Write your NAME on every ANSWER SHEET and hand them in with your ANSWER BOOK, whether you have answered the question or not.
14. Owing to electronic transfer, drawings in the question paper are NOT to scale.
15. Write neatly and legibly.

Copyright reserved

Downloaded from Grade12pastexampapers.co.za

QUESTION 1: SAFETY AND MATERIALS (GENERIC)

Start this question on a NEW page.

1.1 What is the aim of the Occupational Health and Safety Act (Act 85 of 1993) (OHS Act)? (1)

1.2 Name the TWO main causes of accidents. (2 x 1) (2)

1.3 Name ONE reason why scaffolding should be inspected, before it can be used. (1 x 1) (1)

1.4 Answer the following questions with regard to the scaffolding in FIGURE 1.4.

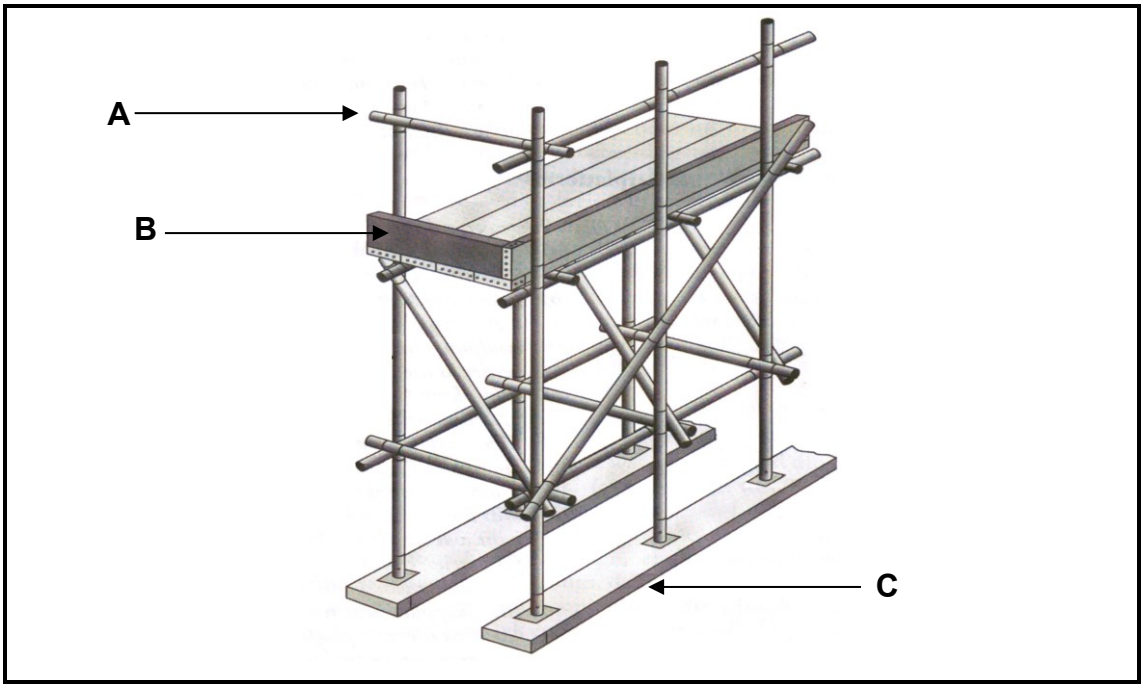

FIGURE 1.4

1.4.1 Name parts **A** to **C**. (3 x 1) (3)

1.4.2 Is this a dependant **or** an undependant scaffolding? (1)

1.4.3 What is the maximum height that part **A** must be from the platform? (1)

1.5 Answer the following questions regarding the regulations on a construction site.

1.5.1 Name ONE way to transport waste material from higher levels in a building to the ground level. (1 x 1) (1)

1.5.2 If work is done above an entrance, what will prevent materials from falling on workers below? (1)

Downloaded from Grade12pastexampapers.co.za

1.6 Indicate whether the following statements are TRUE or FALSE.

1.6.1 Trestle scaffold is used on heights greater than 3 m. (1)

1.6.2 No stack height should exceed three times the width of the material. (1)

1.6.3 Aluminium ladders can be used in the proximity of electrical wires. (1)

1.6.4 The horizontal part of a ladder is called a stile. (1)

1.7 Name the TWO main groups into which paint can be divided. (2 x 1) (2)

1.8 What is the purpose of galvanising? (1)

1.9 Name TWO advantages of curing (concrete). (2 x 1) (2)

[20]

Downloaded from Grade12pastexampapers.co.za

QUESTION 2: GRAPHICS, JOINING AND EQUIPMENT (GENERIC)

Start this question on a NEW page.

2.1 Identify SIX of the descriptions below which are applicable to the checklist of a floor plan.

- Window numbers
- Building lines
- Plot number
- Door swings
- Names of rooms
- Ground contours
- Stair directions
- Sliding doors
- Street number
- Water connection point
- Position of proposed building
- Floor covering (6 x 1) (6)

2.2 FIGURE 2.2 on ANSWER SHEET A shows the incomplete elevation of a building. Complete the elevation by drawing in the following parts on scale 1 : 50.

2.2.1 A window with a length of 1 800 mm and a height of 900 mm. The window is built in 700 mm from the right-hand side and one-third of the right side of the window can open. (7)

2.2.2 A door according to standard measurements, 900 mm from the left side of the building. The door opens to the left. There is one step to the ground level. (5)

2.2.3 The barge board against the gable end. (2)

2.3 Identify the appliances which are illustrated by the following drawing symbols.

2.3.1 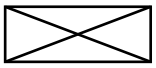 (1)

2.3.2 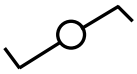 (1)

Downloaded from Grade12pastexampapers.co.za

2.4 Make neat sketches according to standard building drawing practice to illustrate the following symbols.

2.4.1 Water meter (2)

2.4.2 Plaster (2)

2.4.3 Invert level (2)

2.5 Briefly explain the advantages of the square shoulder screw. (2)

2.6 Explain the meaning of the following code on rawl bolts: **R-RBL M06/18**. (3)

2.7 What is the purpose of the foot screws of the dumpy level? (1)

2.8 Identify the cross hairs **A** to **C** in the telescope of the dumpy level in FIGURE 2.8.

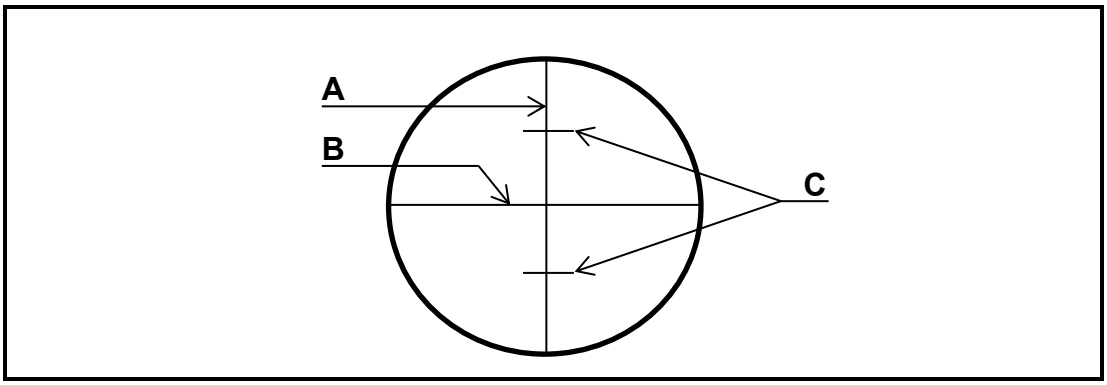

FIGURE 2.8

(3 x 1) (3)

2.9 Name TWO uses of the dumpy level. (2 x 1) (2)

2.10 Motivate briefly why labels and metal plates should be removed from the multi-detector before using the instrument. (1)

[40]

TOTAL SECTION A: 60

Downloaded from Grade12pastexampapers.co.za

QUESTION 3: ROOFS, STAIRCASES AND JOINING (SPECIFIC)

Start this question on a NEW page.

3.1 Answer the following questions with regard to the roof truss in FIGURE 3.1.

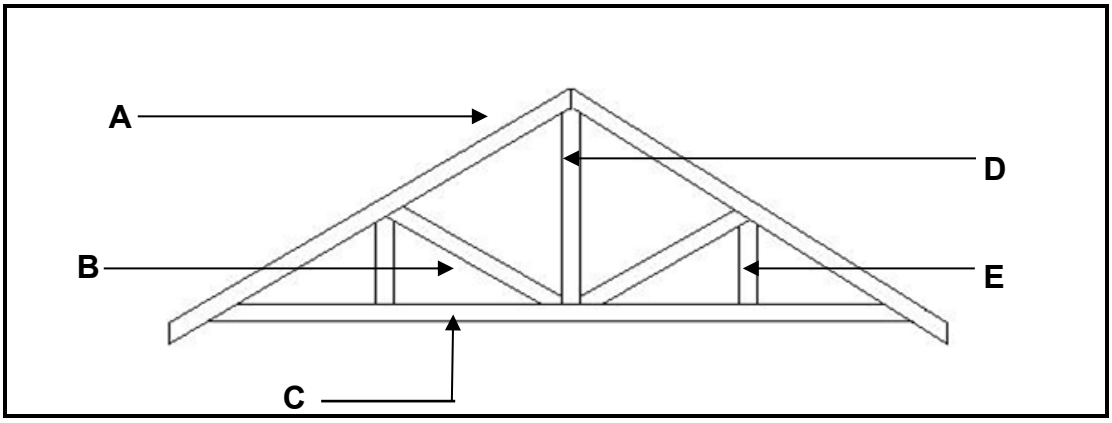

FIGURE 3.1

3.1.1 Name parts **A** to **E**. (5 x 1) (5)

3.1.2 Identify this type of roof truss. (1)

3.2 Name THREE requirements that roof trusses should meet. (3 x 1) (3)

3.3 Answer the following questions with regard to thatched roofs.

3.3.1 What is the minimum diameter of roof poles? (1)

3.3.2 What is the thickness of the dry thatch bundles that are fixed to the roof? (1)

3.3.3 Why should the thatched roof overhangs be at least 4,5 m from any neighbouring property? (1)

3.4 Name TWO advantages for the use of roof underlay. (2 x 1) (2)

3.5 Provide the MEASUREMENT for the following descriptions of staircases.

3.5.1 The minimum measurement from the pitch line to the ceiling. (1)

3.5.2 The maximum measurement of the gaps between the vertical posts. (1)

3.5.3 The maximum pitch of the stairs used by the public. (1)

Downloaded from Grade12pastexampapers.co.za

3.6 Provide ONE term for the following descriptions of staircases.

3.6.1 A level area between two flights of stairs. (1)

3.6.2 The horizontal part of a stair. (1)

3.6.3 A combination of balusters. (1)

3.7 Answer the following questions with regard to the staircase in FIGURE 3.7.

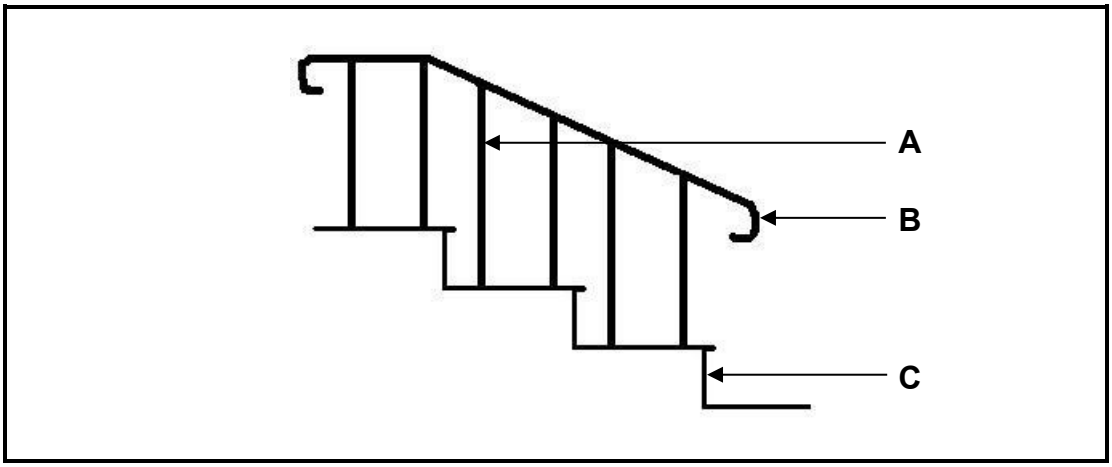

FIGURE 3.7

3.7.1 Name parts **A** to **C**. (3 x 1) (3)

3.7.2 Name ONE material that part **B** can be made of. (1)

3.8 Indicate whether the following statements are TRUE or FALSE.

3.8.1 Galvanised steel straps cannot rust. (1)

3.8.2 Roof underlays is 250 micron in thickness. (1)

3.8.3 The ridge plate joins the roof truss to the wall plate. (1)

3.8.4 The cornice joins the wall plate to the wall. (1)

3.9 Name TWO types of cast-in anchors. (2 x 1) (2)

[30]

Downloaded from Grade12pastexampapers.co.za

QUESTION 4: MATERIAL, EQUIPMENT AND TOOLS, EXCAVATIONS AND FOUNDATIONS (SPECIFIC)

Start this question on a NEW page.

4.1 Choose a description from COLUMN B that best matches with an item in COLUMN A. Write only the letter next to the question numbers (4.1.1 to 4.1.6) in the ANSWER BOOK, for example 4.1.7 J.

COLUMN A	COLUMN B
4.1.1 Brass	A alloy of steel and tin
4.1.2 Polystyrene	B highly toxic
4.1.3 Cast iron	C pumps small volumes of concrete
4.1.4 Line pipe concrete pump	D hard, but is brittle and breaks easily
4.1.5 Lead	E packaging material
4.1.6 Boom pump	F dipped in molten zinc
	G alloy of copper and zinc
	H pumps high volumes of concrete

(6 x 1) (6)

4.2 Answer the following questions with regard to the test in FIGURE 4.2.

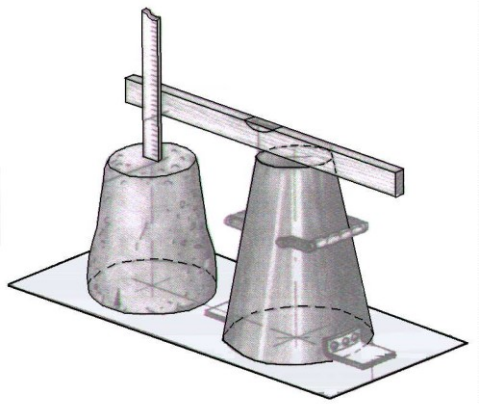

FIGURE 4.2

4.2.1 Identify this type of test. (1)

4.2.2 What is the bottom (bigger) diameter of the cone? (1)

4.2.3 What is the length of the tamping rod? (1)

4.2.4 Name TWO reasons for this test. (2 x 1) (2)

Downloaded from Grade12pastexampapers.co.za

4.3 Name TWO ways of curing concrete. (2 x 1) (2)

4.4 Name the TWO main groups into which metals can be classified. (2 x 1) (2)

4.5 Name THREE types of material that can be used for the cladding of buildings. (3 x 1) (3)

4.6 Answer the following questions on the construction machine in FIGURE 4.6.

FIGURE 4.6

4.6.1 Identify this machine. (1)

4.6.2 Name TWO ways of maintaining the machine. (2 x 1) (2)

4.6.3 Where will this machine be used? (1)

4.7 Name THREE causes for the collapse of an excavation. (3 x 1) (3)

4.8 Name THREE ways of making excavations safe during the night. (3 x 1) (3)

4.9 Explain the safety regulations for the following during excavations.

4.9.1 Access to a deep excavation (1)

4.9.2 The distance of machinery away from trenches (1)

4.9.3 Testing for atmospheric hazards (1)

4.10 Identify the following statements as TRUE or FALSE.

4.10.1 Bracing is necessary for trenches deeper than one metre. (1)

4.10.2 Shoring is not compulsory where the banks are sloped. (1)

4.1.0.3 Excavated material must be at least two metres from trench edges. (1)

Downloaded from Grade12pastexampapers.co.za

4.11 Answer the following questions with regard to the shuttering in FIGURE 4.11.

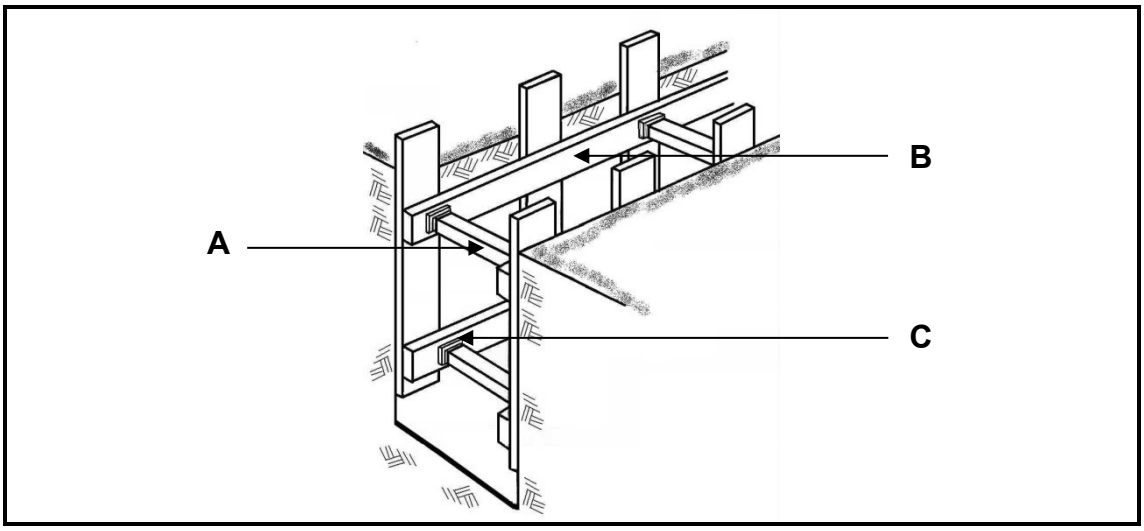

FIGURE 4.11

4.11.1 Identify the type of soil in FIGURE 4.11. (1)

4.11.2 Name the parts **A** to **C**. (3 x 1) (3)

4.12 Name any TWO foundation types. (2 x 1) (2)

[40]

Downloaded from Grade12pastexampapers.co.za

QUESTION 5: BRICKWORK, GRAPHICS, PLASTER AND SCREED (SPECIFIC)

Start this question on a NEW page.

5.1 Answer the following questions with regard to the wall in FIGURE 5.1.

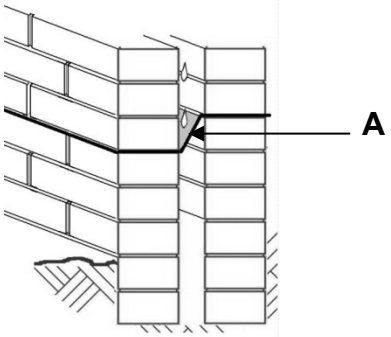

FIGURE 5.1

5.1.1 In what type of bond has this wall been build? (1)

5.1.2 Identify the wall type. (1)

5.1.3 What is the width of the wall? (1)

5.1.4 Identify part **A**. (1)

5.2 Draw a neat sketch on ANSWER SHEET **B** and show a three-layer brick wall in stretcher bond. Show raking back on the left-hand side and toothing on the right-hand side. Use any sufficient scale. (4)

5.3 Answer the following questions with regard to cavity walls.

5.3.1 What is the purpose of a weep hole? (1)

5.3.2 What is the maximum length for a cavity wall? (1)

5.3.3 What is the maximum height for a cavity wall? (1)

5.3.4 What connects the two skins? (1)

5.3.5 In what type of regions will ventilating bricks be used? (1)

5.3.6 How high above ground level must the damp-proof course be laid? (1)

5.4 Name TWO advantages of cavity walls. (2 x 1) (2)

5.5 Name any TWO types of wall ties. (2 x 1) (2)

Downloaded from Grade12pastexampapers.co.za

5.6 Choose a description from COLUMN B that fits best with the item in COLUMN A. Write only the letter next to the question numbers (5.6.1 to 5.6.4) in the ANSWER BOOK, for example. 5.6.5 G.

COLUMN A	COLUMN B
5.6.1 Kerb	A natural soil on which the paving will be laid
5.6.2 Sub-base	B sand used as grouting between paving blocks
5.6.3 Subgrade	C best form of edge restraint for paving
5.6.4 Bedding sand	D final layer upon which paving is laid
	E preparation of the sub-base
	F prepared layer beneath paving and bedding sand

(4 x 1) (4)

5.7 Name TWO advantages of mortar-set paving. (2 x 1) (2)

5.8 Name TWO reasons for construction failure of paving. (2 x 1) (2)

5.9 Draw a neat sketch with EIGHT (8) bricks of the basket-weave paving pattern on ANSWER SHEET B. Use own sufficient scale. (4)

5.10 Answer the following question with regard to the arch in FIGURE 5.10.

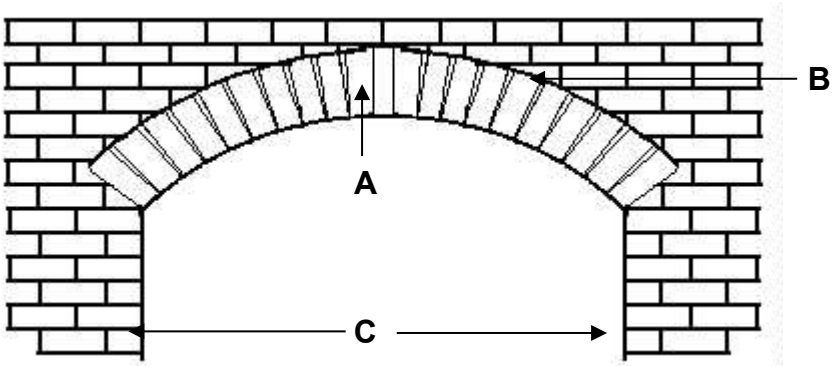

FIGURE 5.10

5.10.1 Identify this type of arch construction. (1)

5.10.2 Name parts **A** to **C**. (3 x 1) (3)

5.11 Name the TWO ingredients of plaster (water and lime excluded). (2 x 1) (2)

5.12 Name TWO types of plaster finishes. (2 x 1) (2)

5.13 Name TWO types of screed layers. (2 x 1) (2)

[40]

Downloaded from Grade12pastexampapers.co.za

QUESTION 6: FORMWORK, REINFORCEMENT, CONCRETE FLOORS AND QUANTITIES (SPECIFIC)

Start this question on a NEW page.

6.1 Name TWO materials that can be used to line the formwork, to obtain a smoother finish for the concrete. (2 x 1) (2)

6.2 Name TWO types of timber boards that can be used for formwork. (2 x 1) (2)

6.3 Name THREE properties of good formwork. (3 x 1) (3)

6.4 Answer the following questions in regard to the floor construction in FIGURE 6.4.

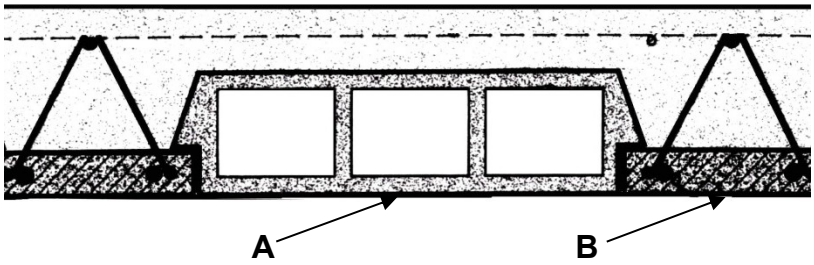

FIGURE 6.4

6.4.1 Name parts **A** and **B**. (2 x 1) (2)

6.4.2 Identify this type of concrete floor. (1)

6.4.3 Name ONE disadvantage of this floor type. (1 x 1) (1)

6.5 Answer the following questions with regard to the rod code in FIGURE 6.5.

Rod / bar code: **16Y20-01-250**

FIGURE 6.5

6.5.1 What type of steel is used? (1)

6.5.2 What is the diameter of the rods? (1)

6.5.3 What is spacing of the rods? (1)

6.6 What forces are counteracted by the following parts in a concrete beam?

6.6.1 Main bar (1)

6.6.2 Anchor bar (1)

Downloaded from Grade12pastexampapers.co.za

6.7 Name THREE properties of reinforced steel bars. (3 x 1) (3)

6.8 Name TWO reasons for the cover depth of reinforcement in concrete work. (2 x 1) (2)

6.9 FIGURE 6.9 shows the foundation strips with inside measurements for a storeroom. The foundation is 700 mm wide and 250 mm thick.
Answer the following questions in the ANSWER BOOK.
Table format is NOT compulsory (Show ALL formulas and steps.)

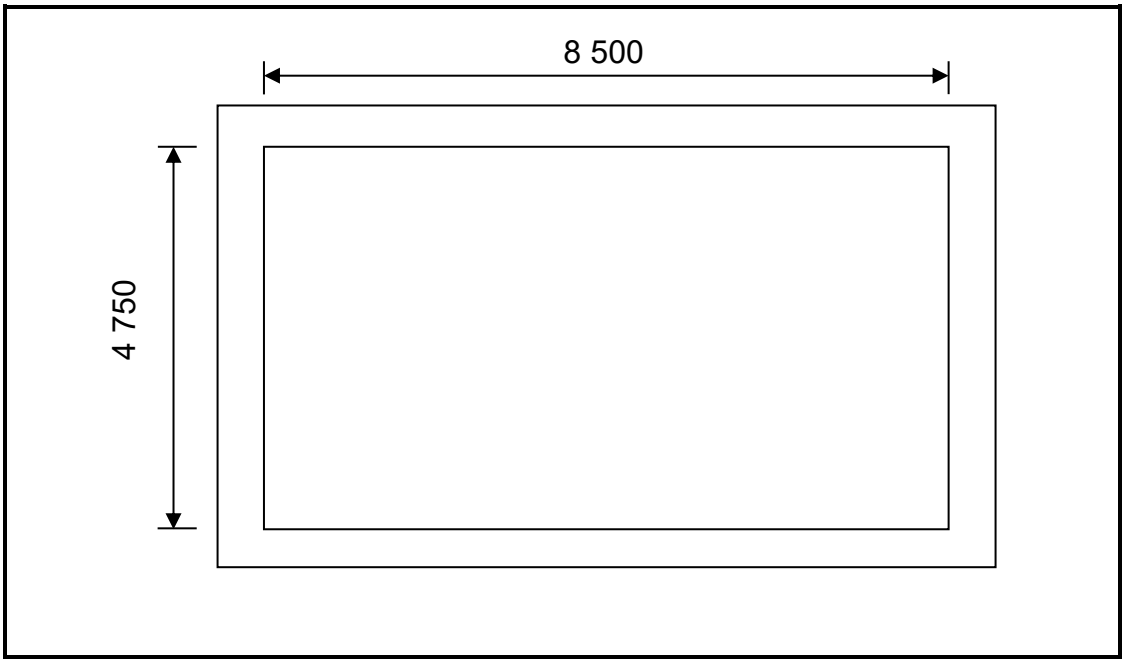

FIGURE 6.9

6.9.1 Calculate the centreline of the foundation. (5)

6.9.2 Calculate the volume of concrete needed. (4)
[30]

TOTAL: 200

Downloaded from Grade12pastexampapers.co.za

ANSWER SHEET **A**	CIVIL TECHNOLOGY GENERIC	NAME: _____

2.2 FIGURE 2.2 on ANSWER SHEET A shows the incomplete elevation of a building. Complete the elevation by drawing in the following parts on scale 1 : 50.

2.2.1 A window with a length of 1 800 mm and a height of 900 mm. The window is built in 700 mm from the right-hand side and one-third of the right side of the window can open. (7)

2.2.2 A door according to standard measurements, 900 mm from the left side of the building. The door opens to the left. There is one step to the ground level. (5)

2.2.3 The barge board against the gable end. (2)

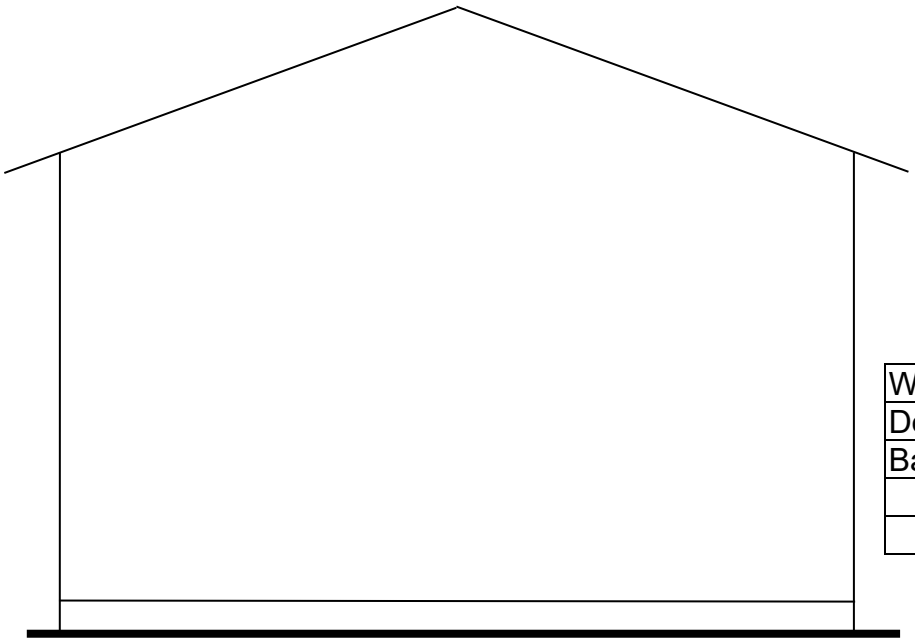

FIGURE 2.2

Window	7	
Door	5	
Barge board	2	
TOTAL:	**14**	

Downloaded from Grade12pastexampapers.co.za

ANSWER SHEET **B**	CIVIL TECHNOLOGY CONSTRUCTION	NAME: _____

5.2 Draw a neat sketch and show a three layer brick wall in stretcher bond.
Show raking back on the left-hand side and toothing on the right-hand side.
Use own sufficient scale

(4)

5.9 Draw a neat sketch with eight (8) bricks of the basket-weave paving pattern.
Use own sufficient scale.

(4)

Copyright reserved

Downloaded from Grade12pastexampapers.co.za