basic education

Department:
Basic Education
REPUBLIC OF SOUTH AFRICA

NATIONAL SENIOR CERTIFICATE

GRADE 12

AGRICULTURAL TECHNOLOGY

NOVEMBER 2025

MARKS: 200

TIME: 3 hours

This question paper consists of 17 pages.

Copyright reserved

Downloaded from Grade12pastexampapers.co.za

INSTRUCTIONS AND INFORMATION

1. GENERAL INSTRUCTIONS AND INFORMATION

   1.1 This question paper consists of TWO sections, namely SECTION A and SECTION B.

   1.2 BOTH sections are COMPULSORY.

   1.3 Answer ALL the questions in the ANSWER BOOK.

   1.4 Number the answers correctly according to the numbering system used in this question paper.

   1.5 You may use a non-programmable calculator.

   1.6 Show ALL calculations.

   1.7 Write neatly and legibly.

2. SECTION A: SHORT QUESTIONS

   2.1 This section consists of THREE questions.

   2.2 Follow the instructions when answering the questions.

3. SECTION B: STRUCTURED LONG QUESTIONS

   3.1 This section consists of FIVE questions.

   3.2 Start EACH question on a NEW page.

Downloaded from Grade12pastexampapers.co.za

SECTION A

QUESTION 1

1.1 Various options are provided as possible answers to the following questions. Choose the answer and write only the letter (A–D) next to the question numbers (1.1.1 to 1.1.10) in the ANSWER BOOK, e.g. 1.1.11 D.

1.1.1 In a hazardous situation, you must first spot the potential hazard, then assess the risk and finally you must …

A act irresponsibly.
B lie down and wait for help.
C panic.
D make changes to eliminate or control the hazard.

1.1.2 To prevent an injury when working with the power take-off (PTO) shaft, the operator should …

A never deactivate the sensitivity element.
B stop the power take-off before dismounting from the tractor.
C use a slip clutch to safely operate the power take-off shaft.
D climb over the power take-off shaft to keep spectators away.

1.1.3 The main structure of the centre-pivot irrigation system consists of several pipe sections, usually made of ...

A galvanised steel.
B cast iron.
C aluminium.
D magnesium.

1.1.4 Which ONE of the following is NOT a work design (ergonomic) hazard?

A Lifting of a tractor tyre
B Working with high voltage
C Moving heavy workshop machinery
D Repositioning I-beam sections

1.1.5 The … valve should be opened first when lighting an oxyacetylene flame.

A oxygen
B argon
C acetylene
D carbon dioxide

Downloaded from Grade12pastexampapers.co.za

1.1.6 Which ONE of the following will have a positive influence on a tractor's centre of gravity?

A Filling the tractor's rear wheels with water
B Increasing the carrying height of the front-end loader
C Increasing speed when turning a corner
D Increasing the load on the trailer

1.1.7 Workplace stress, such as harassment, is a health hazard that can cause a/an … illness.

A occupational
B parasitic
C infectious
D genetic

1.1.8 The floating ... of the ram baler constantly rotates and feeds the hay to the packing arms.

A roller
B auger
C pick-up wheel
D flywheel

1.1.9 A herbicide has a mixing ratio of 5 mℓ herbicide to 1 ℓ of water. Determine the amount of herbicide that must be added to 20 ℓ of water:

A 50 mℓ
B 0,1 ℓ
C 100 ℓ
D 1 ℓ

1.1.10 The background colour of the safety signs found on electric fencing must be ...

A yellow.
B black.
C white.
D red. (10 x 2) (20)

Downloaded from Grade12pastexampapers.co.za

1.2 Change the underlined word(s) in each of the following statements to make the statements TRUE. Write only the appropriate word(s) next to the question numbers (1.2.1 to 1.2.5) in the ANSWER BOOK, e.g. 1.2.6 Tractor.

1.2.1 A <u>regulator</u> controls the one-directional flow of water in an irrigation system.

1.2.2 Mild steel coated with <u>magnesium</u> must be welded with caution because it gives off poisonous gases.

1.2.3 <u>Three-phase</u> current consists of 220–240 volts.

1.2.4 <u>Variable-rate technology</u> is used to determine location by using various satellites.

1.2.5 The rotor of a wind turbine is connected to a main shaft that spins a <u>motor</u> that generates electricity. (5 x 2) (10)

1.3 Choose a word/term from COLUMN B that matches a description in COLUMN A. Write only the letter (A–J) next to the question numbers (1.3.1 to 1.3.5) in the ANSWER BOOK, e.g. 1.3.6 K.

COLUMN A		COLUMN B	
1.3.1	Is mainly used for bearings and does not seize and swell on shafts	A	biofuel
1.3.2	An alternative fuel made from vegetable oil	B	Harry Ferguson
1.3.3	A permanent layer applied to metal fence posts to prevent corrosion	C	grease
1.3.4	The designer of the three-point mechanism	D	resin
1.3.5	Low viscosity fluids that can be transformed into a tough, flexible solid by adding a hardening agent	E	tin and lead
		F	Vesconite
		G	ethanol
		H	petrol
		I	paint
		J	Henry Ford

(5 x 2) (10)

TOTAL SECTION A: 40

Downloaded from Grade12pastexampapers.co.za

SECTION B

QUESTION 2: MATERIALS AND STRUCTURES

Start this question on a NEW page.

2.1 Study the picture of stainless steel pipes below and answer the questions that follow.

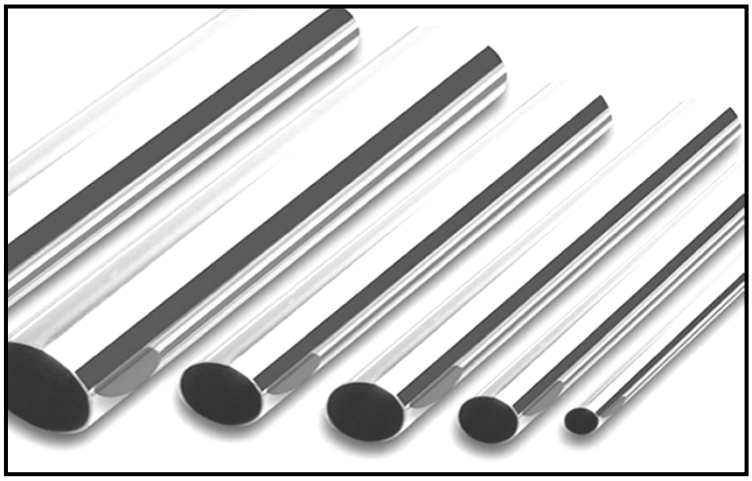

2.1.1 Name THREE alloy elements found in stainless steel and state ONE influence of EACH. (6)

2.1.2 Which of the following welding machines, MIG or TIG, is preferred when welding stainless steel? Motivate your answer. (3)

2.2 A farmer needs to repair a brass bell by brazing it. What precautionary measures must he/she take to prevent cracks and brittleness? (2)

2.3 Describe what is meant by the *adhesion properties of an adhesive*. (2)

2.4 Discuss FOUR physical hazards for the human body when working with fibreglass and state a precautionary measure to prevent EACH hazard. (8)

2.5 List THREE actions that can be taken to improve the earthing efficiency of an electrical fence. (3)

Downloaded from Grade12pastexampapers.co.za

2.6 Give ONE word/term for each of the following descriptions by choosing a word/term from the list below. Write only the word/term next to the question numbers (2.6.1 to 2.6.6) in the ANSWER BOOK. Each word/term may only be used ONCE.

earth spike; insulator; 10 kVA; sparking; energiser; lightning arrester; power source

DESCRIPTION	WORD/TERM
Occurs if there is a crack in or a loose connection on an electric fence	2.6.1
Maximum voltage allowed for an electric fence	2.6.2
The negative pole of the energiser is connected to this component	2.6.3
Prevents damage to the energiser from lightning strikes	2.6.4
Converts battery power into a high-voltage pulse	2.6.5
Prevents the electric fence wires from touching the fence posts	2.6.6

(6)

2.7 Identify the components of an electric fence in the diagram below. Write only the answer next to the question numbers (2.7.1 to 2.7.5) in the ANSWER BOOK, e.g. 2.7.6 Solar.

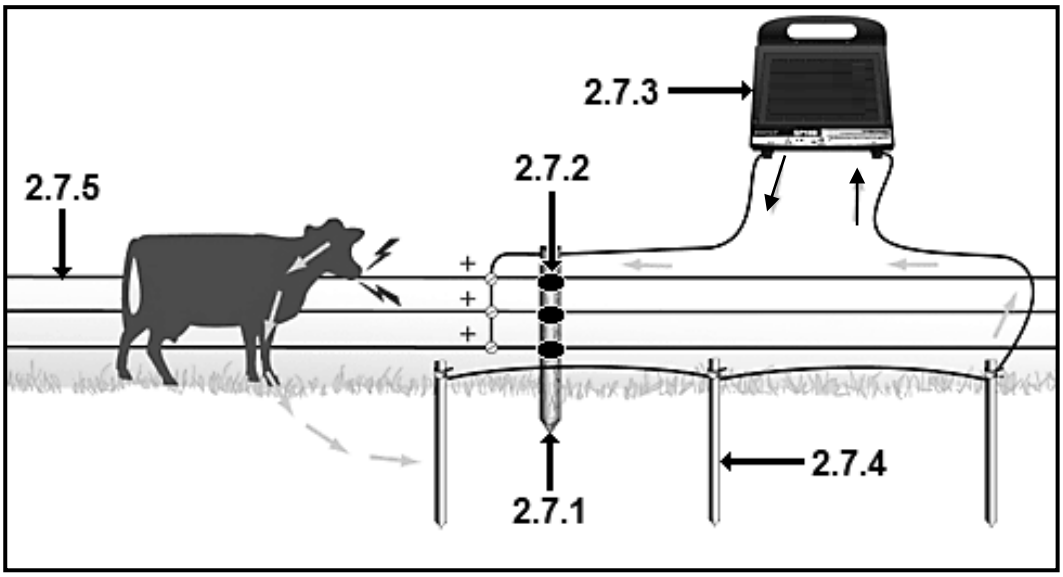

(5)
[35]

Downloaded from Grade12pastexampapers.co.za

QUESTION 3: ENERGY

Start this question on a NEW page.

3.1 Study the picture of a wind turbine below and answer the questions that follow.

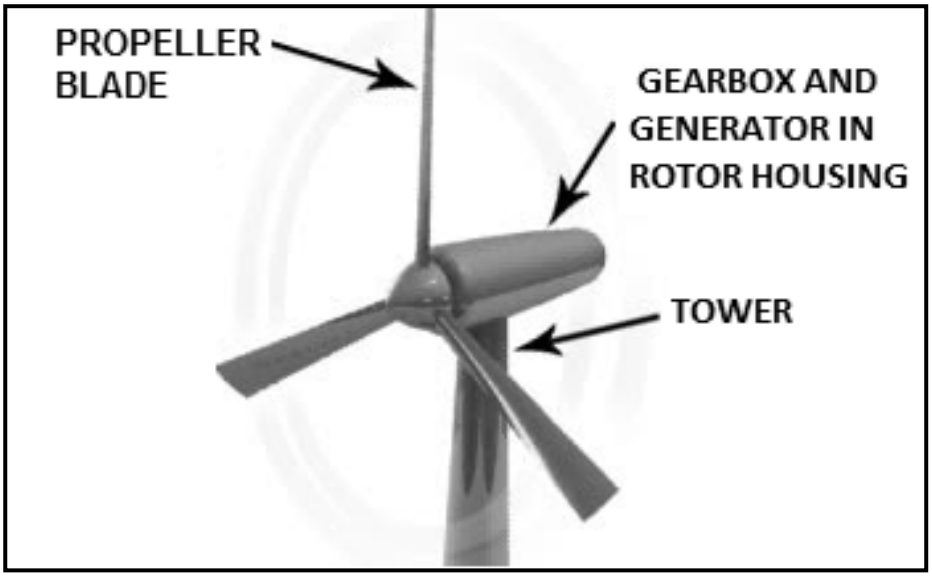

3.1.1 Name the function of EACH of the following wind turbine parts, as indicated by the labels in the picture above:

(a) Propeller blade (1)

(b) Tower (1)

(c) Gearbox (1)

(d) Generator (1)

3.1.2 Describe how this system generates electricity. (3)

Downloaded from Grade12pastexampapers.co.za

3.2 Geothermal energy is one of the most underutilised renewable energy sources on Earth. Study the picture below and answer the questions that follow.

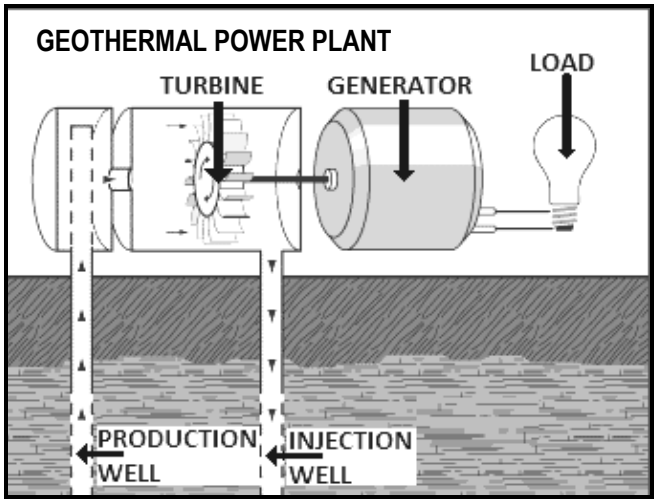

3.2.1 State FIVE advantages of geothermal energy. (5)

3.2.2 Name ONE instance where the use of geothermal energy can pollute the environment. (1)

3.2.3 State the consequence if too much cold water is pumped into the geothermal heat source. (1)

3.3 Study the picture below and answer the questions that follow.

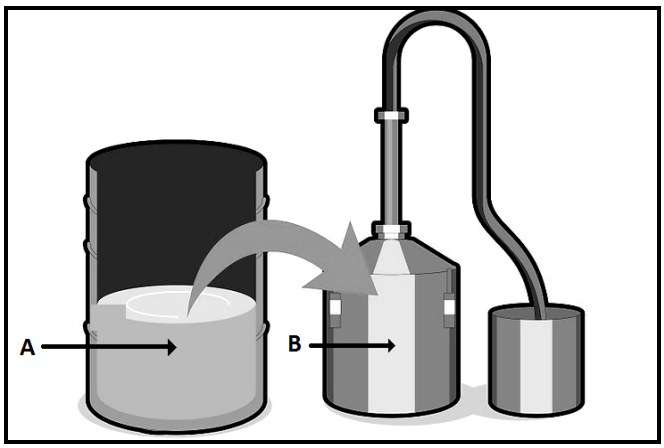

3.3.1 Name TWO products used in the manufacturing of ethanol. (2)

3.3.2 Identify the processes, indicated by **A** and **B**, when manufacturing ethanol. (2)

3.4 Name TWO plants used to manufacture bio-diesel. (2)
[20]

Downloaded from Grade12pastexampapers.co.za

QUESTION 4: SKILLS AND CONSTRUCTION PROCESSES

Start this question on a NEW page.

4.1 The image below shows an oxyacetylene welding apparatus.

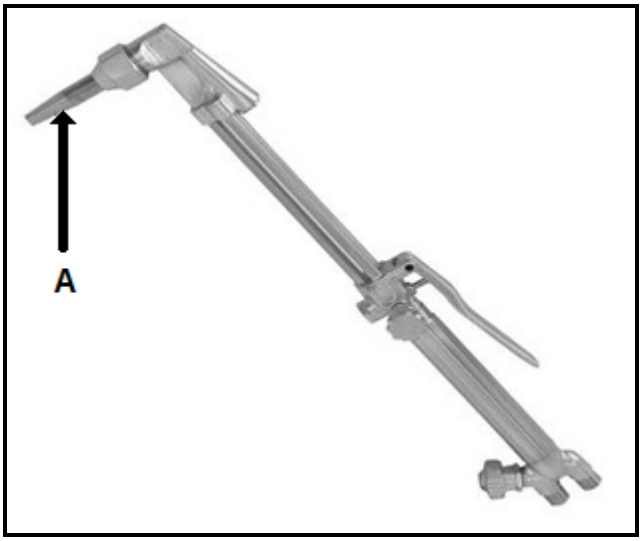

4.1.1 Name the type of metal used to manufacture the cutting nozzle indicated by arrow **A** in the image above. (1)

4.1.2 Make FOUR suggestions to ensure high-quality welding joints when oxyacetylene welding is done in the overhead welding position. (4)

4.2 Identify the welding defects by studying the causes in the table below. Write only the name of the defect next to the question numbers (4.2.1 to 4.2.4) in the ANSWER BOOK.

CAUSE	DEFECT
- Draughty conditions - Painted, wet or oily welding surface - Wet or rusty filler wire	4.2.1
- Preparation too narrow - Root gap too small - Worn contact tip causing irregular arc	4.2.2
- Inadequate inductance - Current too low - Rusty or primed plate	4.2.3
- Welding speed too fast - Current too high - Poor welding technique	4.2.4

(4)

Downloaded from Grade12pastexampapers.co.za

4.3

SCENARIO

A farm manager needs to design a cover for a self-feeder trough.

Use the following information to design and draw a freehand sketch of a cover for the trough:

- Width 750 mm
- Length 1 000 mm
- Angle iron 25 mm x 25 mm
- Metal sheet 3 mm
- Two hinges
- Locking mechanism

Marks will be allocated for:

Proportional drawing	(1)
Practical application	(2)
Two hinges	(1)
Lock mechanism	(1)
Two measurements	(2)
Cutting list of material to be used	(2)

(9)

4.4 Study the picture below of a plasma-cutting machine and answer the questions that follow.

4.4.1 Give TWO reasons for using a welding helmet while working with the plasma-cutting machine. (2)

4.4.2 Why would you recommend the use of nitrogen gas when using the plasma-cutting machine? (2)

4.4.3 Name the material used to manufacture the plasma-cutting machine electrode. (1)

Downloaded from Grade12pastexampapers.co.za

4.4.4 State FOUR advantages of using a plasma-cutting apparatus. (4)

4.4.5 State FOUR consequences when moisture enters the plasma-cutter nozzle. (4)

4.4.6 What adjustment must be made to the plasma-cutting machine to cut various metal thicknesses? (1)

4.5 The gases in the list below are all used in plasma cutting for the cutting of various types of metals.

Indicate which gas will be used for EACH of the following applications. Write only the gas next to the question numbers (4.5.1 to 4.5.3) in the ANSWER BOOK.

air; hydrogen; nitrogen; argon

APPLICATION	GAS
High-quality cutting for mild aluminium, stainless steel or carbon steel	4.5.1
Used to cut thick steel and metal and is the hottest gas available	4.5.2
Cuts with a consistent speed and lengthens the life of the machine	4.5.3

(3)
[35]

Downloaded from Grade12pastexampapers.co.za

QUESTION 5: TOOLS, IMPLEMENTS AND EQUIPMENT

Start this question on a NEW page.

5.1 Study the picture below and answer the questions that follow.

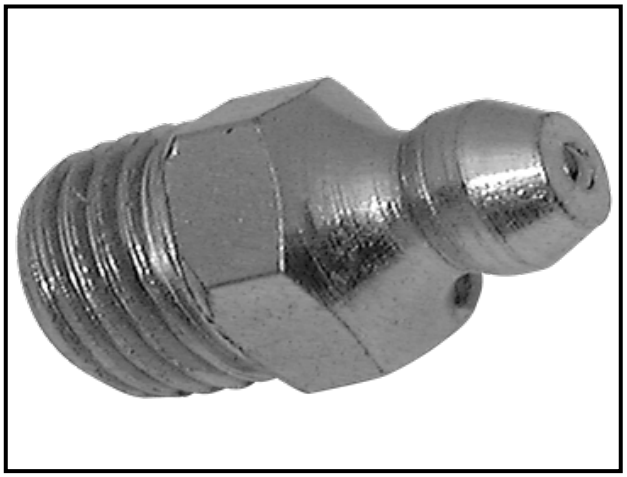

5.1.1 Identify the part in the picture above. (1)

5.1.2 Describe the working of the part identified in QUESTION 5.1.1. (2)

5.2 The pictures below show two types of gears used in farm machinery.

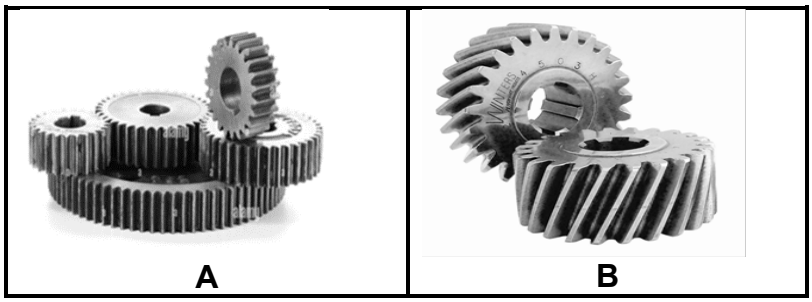

5.2.1 Identify gears **A** and **B** as shown in the pictures above. (2)

5.2.2 Two gears connected in a drive system have a ratio of 1 : 3. Calculate the number of teeth on the driven gear if the drive gear has 60 teeth.

Show ALL calculations. (4)

Downloaded from Grade12pastexampapers.co.za

5.3 The picture below shows a rotary cutting machine that is used on a farm.

5.3.1 This machine is very dangerous. Give FIVE safety tips that must be followed when operating the machine above. (5)

5.3.2 List THREE points to consider when maintenance is done on the rotary cutting machine. (3)

5.3.3 Describe the hitching of the rotary cutting machine to a tractor. (4)

5.4 A hydraulic cylinder used in a tractor is shown below.

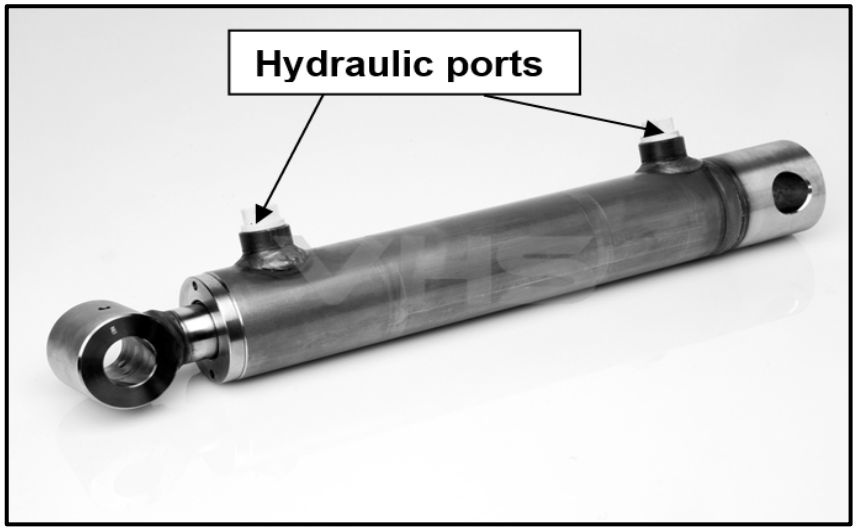

5.4.1 Name the type of hydraulic cylinder shown in the picture above. (1)

5.4.2 Describe the working of this kind of hydraulic cylinder. (4)

5.4.3 Name THREE advantages of the transmission oil that is used in hydraulic systems. (3)

5.4.4 Which side of this hydraulic cylinder is the strongest? Motivate your answer. (3)

Downloaded from Grade12pastexampapers.co.za

5.5 Study the picture of a clutch plate found on a tractor below and answer the questions that follow.

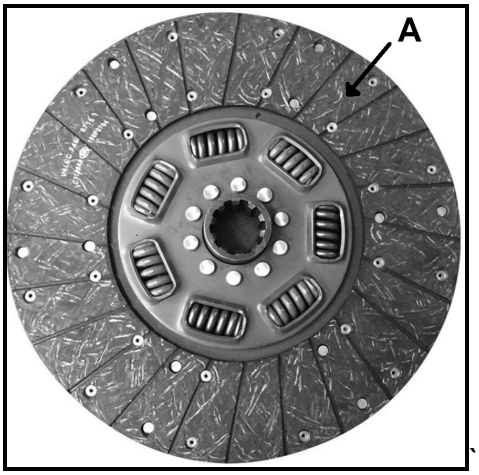

5.5.1 Arrow **A** shows a clutch plate lining. What material is used for the manufacturing of the lining? (1)

5.5.2 Name TWO properties of the friction material of a good clutch system. (2)

5.5.3 Give TWO reasons for equipping tractors with a clutch system. (2)

5.6 Upon inspection of a second-hand tractor, the farmer noticed some disturbing signs while the engine was idling. Give a diagnosis of the THREE signs below that show that there is something wrong with the engine:

5.6.1 Black exhaust smoke (1)

5.6.2 Rattling noise coming from the engine (1)

5.6.3 Engine heats up quickly (1)
[40]

Downloaded from Grade12pastexampapers.co.za

QUESTION 6: WATER MANAGEMENT

Start this question on a NEW page.

6.1 Study the photograph of a centre-pivot irrigation system below and answer the questions that follow.

6.1.1 Give THREE reasons why the system as above is considered to be a labour-saving irrigation system. (3)

6.1.2 Describe how water can be effectively applied through a centre-pivot irrigation system. (4)

6.2 State THREE benefits of using irrigation software in the management of irrigation systems. (3)

Downloaded from Grade12pastexampapers.co.za

6.3 Study the water purification system in the picture below and answer the questions that follow.

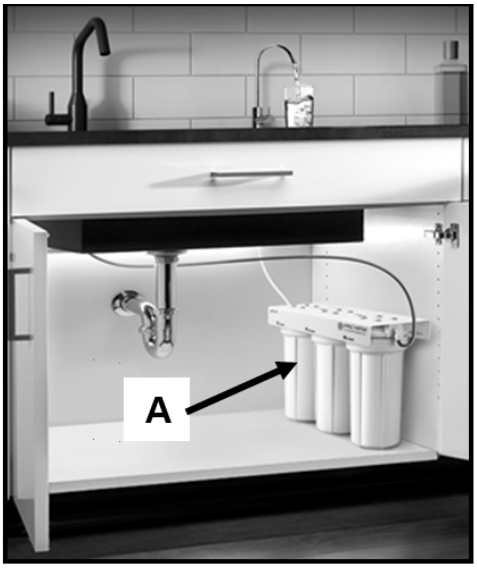

6.3.1 Give TWO reasons for installing the system indicated by arrow **A**. (2)

6.3.2 List THREE effective methods that can be used to make brackish water drinkable. (3)

6.4 Draw a neat labelled sketch of a septic tank system.

Mark allocation:

Design	2
Drawing	2
Labels	2

(6)

6.5 Name THREE different types of home drainage systems. (3)

6.6 Precision farming is a combination of several technologies.

6.6.1 State FOUR advantages of the use of variable-rate technology (VRT) on a farm. (4)

6.6.2 Name TWO advanced technological systems, except VRT, that are used in precision farming. (2)

[30]

TOTAL SECTION B: 160
GRAND TOTAL: 200

Copyright reserved

Downloaded from Grade12pastexampapers.co.za