basic education

Department:
Basic Education
REPUBLIC OF SOUTH AFRICA

SENIOR CERTIFICATE EXAMINATIONS/
NATIONAL SENIOR CERTIFICATE EXAMINATIONS

AGRICULTURAL TECHNOLOGY

MAY/JUNE 2025

MARKS: 200

TIME: 3 hours

This question paper consists of 16 pages.

Copyright reserved

Downloaded from Grade12pastexampapers.co.za

INSTRUCTIONS AND INFORMATION

1. GENERAL INSTRUCTIONS AND INFORMATION

   1.1 This question paper consists of TWO sections, namely SECTION A and SECTION B.

   1.2 BOTH sections are COMPULSORY.

   1.3 Answer ALL the questions in the ANSWER BOOK.

   1.4 Number the answers correctly according to the numbering system used in this question paper.

   1.5 You may use a non-programmable calculators.

   1.6 Show ALL calculations.

   1.7 Write neatly and legibly.

2. SECTION A: SHORT QUESTIONS

   2.1 This section consists of THREE questions.

   2.2 Follow the instructions when answering the questions.

3. SECTION B: STRUCTURED LONG QUESTIONS

   3.1 This section consists of FIVE questions.

   3.2 Start EACH question on a NEW page.

Downloaded from Grade12pastexampapers.co.za

SECTION A

QUESTION 1

1.1 Various options are provided as possible answers to the following questions. Choose the answer and write only the letter (A–D) next to the question numbers (1.1.1 to 1.1.10) in the ANSWER BOOK, e.g. 1.1.11 D.

1.1.1 The purpose of a bearing is to …

A facilitate the power take-off shaft to turn at an angle.
B manage the speed of the variable-rate technology sensor.
C transfer rotation from the input shaft to the output shaft.
D reduce friction between a shaft and machine component.

1.1.2 An irrigation system that distributes pressurised water to a field with the use of sprayers that apply water downwards:

A Drip irrigation
B Overhead irrigation
C Flood irrigation
D Furrow irrigation

1.1.3 A filtering system installed in an irrigation system to filter out undesirable material from the water to prevent blockages of the sprayers:

A Sand filter
B Oil filter
C Air filter
D Carbon filter

1.1.4 A special electrode is used in this type of welding process to make the process easier because the welding joint 'freezes' more quickly:

A Hard facing
B Vertical up arc welding
C Induction welding
D MIG welding

1.1.5 … is a synthetic material with a melting point of 327 °C.

A Rubber
B Teflon
C Fibreglass
D PVC

Downloaded from Grade12pastexampapers.co.za

1.1.6 A hard metal alloy with antimicrobial properties and resistant to corrosion, chemicals, acids and alkali:

A Mild steel
B Stainless steel
C Cast iron
D Vesconite

1.1.7 Fixed capital as an economic factor:

A Land, buildings and boreholes
B Parts, fuel and wages
C Depreciation
D Repairs, contract work and transport

1.1.8 This adhesive will fail when used to join two materials that will be used in wet conditions:

A Silicon
B PVA
C Latex
D Epoxy

1.1.9 Black smoke indicates that the tractor's …

A fuel system is dysfunctional.
B water leaks into the combustion chamber.
C engine uses too much oil.
D diesel mixture is too rich.

1.1.10 The … is used to supply compressed air for operating tools, such as pneumatic wrenches and spray-paint tools.

A inverter
B fan
C grease gun
D compressor (10 x 2) (20)

Downloaded from Grade12pastexampapers.co.za

1.2 Change the UNDERLINED word(s) in each of the following statements to make the statements TRUE. Write only the appropriate word(s) next to the question numbers (1.2.1 to 1.2.5) in the ANSWER BOOK, e.g. 1.2.6 Tractor.

1.2.1 Water <u>filtering</u> is used in irrigation management to determine the correct frequency, quantity and duration of irrigation.

1.2.2 The <u>French drain</u> serves as a structure where household waste material gradually gets broken down by bacterial action.

1.2.3 The plasma-cutting process involves the use of a tungsten electrode and high-pressure plasma to generate and carry an electrical arc between a <u>plastic</u> nozzle and the work piece.

1.2.4 <u>Teflon</u> is a thermoplastic material made from internally lubricated polymers.

1.2.5 An electric motor and <u>V-belt</u> system are installed at the base of the wind turbine's blades to change the pitch of the blades to compensate for different wind speeds. (5 x 2) (10)

1.3 Choose a word/term from COLUMN B that matches a description in COLUMN A. Write only the letter (A–J) next to the question numbers (1.3.1 to 1.3.5) in the ANSWER BOOK, e.g. 1.3.6 K.

COLUMN A	COLUMN B
1.3.1 A standard type of gas used to cut carbon steel with the plasma-cutting machine	A stainless steel
	B oxygen
1.3.2 A type of metal that can be cut with an oxyacetylene cutting set	C fork lift
	D aluminium
1.3.3 Equipment used in the field to move and stack large round bales	E acetylene
	F front-end fork lift
1.3.4 Detects the wind speed and direction on a wind turbine	G anemometer
	H ductility
1.3.5 Refers to the ability of a metal to stretch without breaking	I hardness
	J tensiometer

(5 x 2) (10)

TOTAL SECTION A: 40

Downloaded from Grade12pastexampapers.co.za

SECTION B

QUESTION 2: MATERIALS AND STRUCTURES

Start this question on a NEW page.

2.1 Name TWO alloy elements in stainless steel that reduce magnetism. (2)

2.2 Complete the table below by writing only the correct answer next to the question numbers (2.2.1 to 2.2.4) in the ANSWER BOOK.

METAL ALLOY	COMPOUND	APPLICATION
Brass	Copper and zinc	2.2.1 2.2.2
Bronze	2.2.3 2.2.4	Bronze sculptures, bearings, clips, electrical connectors and springs

(4)

2.3 Give THREE reasons why tin is a suitable material to use for the coating on food cans. (3)

2.4 Bakelite is a synthetic material used in various applications. Name ONE property and ONE use of this material. (2)

2.5 Give the term used for describing the inherent strength of an adhesive. (1)

2.6 List FOUR properties that make fibreglass a suitable material to manufacture seed bins for planters. (4)

2.7 State THREE advantages of using Vesconite in the agricultural sector. (3)

2.8 Explain why Teflon is used as a surface coating in the manufacturing of cooking utensils. (4)

Downloaded from Grade12pastexampapers.co.za

2.9 The pictures below show TWO types of wire tensioners used on electrical fences.

A

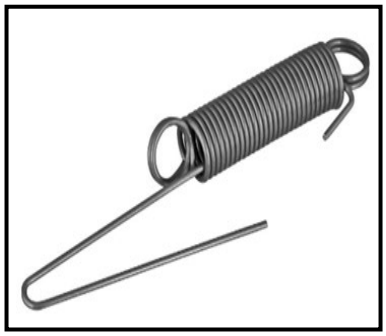

B

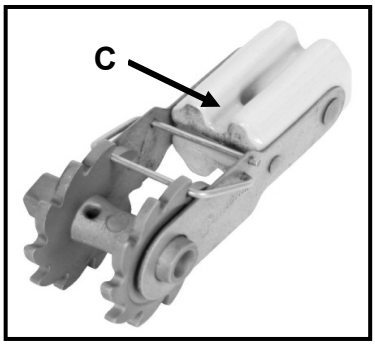

2.9.1 Identify the wire tensioners in PICTURES **A** and **B** above. (2)

2.9.2 Which ONE of the above tensioners is most suitable for applying tension to fence wires that extend over long distances? (1)

2.9.3 Arrow **C** in Picture **B** shows an isolator. Name TWO materials that are used to manufacture this type of isolator. (2)

2.10 Name TWO types of batteries that can be used to provide power to the energiser of an electric fence. (2)

2.11 List THREE points to remember when placing safety signs on an electrical fence. (3)

2.12 Name a suitable material that can be used to manufacture the earth spikes of an electrical fence. Motivate your answer. (2)
[35]

Downloaded from Grade12pastexampapers.co.za

QUESTION 3: ENERGY

Start this question on a NEW page.

3.1 Study the photo of a photovoltaic solar system below and answer the questions that follow.

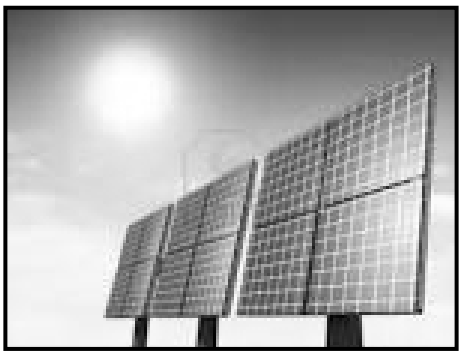

3.1.1 State THREE methods that can be used to protect the surfaces of the solar panels, shown in the photo above, from the elements of nature. (3)

3.1.2 Name the unit used to measure the output power of the system shown above. (1)

3.1.3 Discuss FOUR aspects that have an influence on the efficiency of the photovoltaic solar system. (4)

3.1.4 Name the energy source obtained from the sun rays to generate electricity with a photovoltaic solar system. (1)

3.2 Name THREE benefits of wind turbines on a farm. (3)

3.3 Describe the limitations in the exploration of a geothermal energy source. (4)

3.4 Tabulate TWO advantages and TWO disadvantages of biofuel. (4)
[20]

Downloaded from Grade12pastexampapers.co.za

QUESTION 4: SKILLS AND CONSTRUCTION PROCESSES

Start this question on a NEW page.

4.1 Study the scenario below and answer the questions that follow.

A farmer needs to fix a broken gate on the farm by welding it. It is very windy and the farmer must use a petrol generator to generate electricity.

4.1.1 Name the preferred welding machine that can be used under these conditions and motivate your answer. (3)

4.1.2 Name THREE points that a beginner welding operator must consider when welding with the welding machine named in QUESTION 4.1.1. (3)

4.2 The picture below shows a MIG welding-machine component.

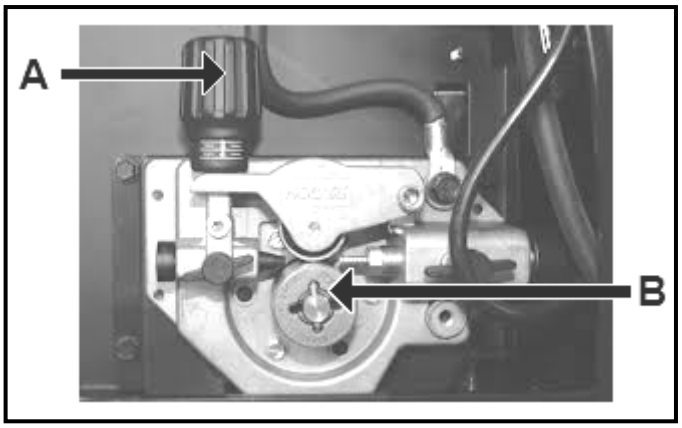

4.2.1 Which part, **A** or **B**, feeds the wire through the nozzle of the torch? (1)

4.2.2 Name and describe the function of **A**. (3)

4.2.3 State TWO measures that can be incorporated in the MIG welding process to prevent porosity. (2)

4.2.4 State THREE advantages of the MIG welding process. (3)

4.2.5 List THREE steps that must be followed before welding starts with the MIG welding machine. (3)

4.3 Controlling distortion during the welding process ensures a proper welding joint.

4.3.1 Do you agree with the statement above? Motivate your answer. (3)

4.3.2 Name TWO methods of controlling distortion before the welding process starts. (2)

Downloaded from Grade12pastexampapers.co.za

4.4 Study the image of the oxyacetylene apparatus below and answer the questions that follow.

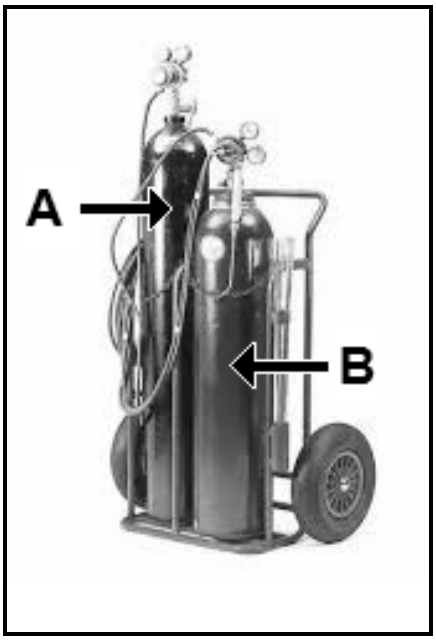

4.4.1 Name the gases that are used in cylinder **A** and in cylinder **B**. (2)

4.4.2 Explain why gas cylinders should be stored in an upright position. (2)

4.4.3 Describe the difference between the thread found on the acetylene cylinder and the thread found on the CO_2 gas cylinder of the MIG welding machine. (3)

4.4.4 Which ONE of the pictures below show the correct PPE that must be used when cutting with the oxyacetylene apparatus? Motivate your answer.

A

B

(3)

4.4.5 Which valve on the oxyacetylene cutting torch needs to be closed first at the end of the process? Motivate your answer. (2)

[35]

Downloaded from Grade12pastexampapers.co.za

QUESTION 5: TOOLS, IMPLEMENTS AND EQUIPMENT

Start this question on a NEW page.

5.1 Mass displacement plays a considerable role in the handling of heavy objects. Make use of the labelled image below to answer the questions that follow. Write only the letter (**A**, **B** or **C**) to answer QUESTIONS 5.1.1 to 5.1.3.

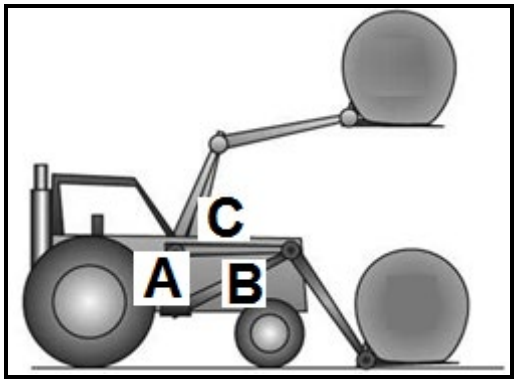

5.1.1 Identify the normal centre of gravity point on the tractor when the tractor carries no load. (1)

5.1.2 To which point on the tractor does the centre of gravity move when a bale is lifted up high? (1)

5.1.3 To what point does the centre of gravity move when a heavy bale is carried close to the ground? (1)

5.1.4 Some operators carry the bale in a higher position for improved visibility. Do you think it is advisable to do so? Motivate your answer. (3)

Downloaded from Grade12pastexampapers.co.za

5.2 The picture below shows a machine that is used for cutting lucerne.

5.2.1 Name a safety device that can be installed on this machine to alert bystanders when the operator moves the machine backwards. (1)

5.2.2 List FIVE points to remember when repairs are done on worn cutting blades of this machine. (5)

5.2.3 What type of hydraulic cylinder must be installed to adjust the height of the cutting table? Motivate your answer. (2)

5.2.4 State TWO advantages of using this machine instead of manual labour to cut lucerne. (2)

5.2.5 Name a modern technological device that is used to help the operator to steer this machine in a straight line when cutting lucerne. (1)

5.3 Study the picture below and answer the questions that follow.

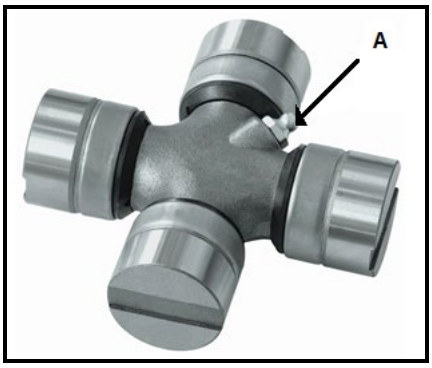

5.3.1 Name the device and describe its function. (2)

5.3.2 Where can this device be installed? (1)

5.3.3 Identify **A** and explain its function. (3)

5.4 Name ONE safety device that is fitted between the PTO shaft and the flywheel of the baling machine. (1)

5.5 State FOUR actions that must be performed on the baling machine before storing it. (4)

Downloaded from Grade12pastexampapers.co.za

5.6 The picture below shows a coupling that is used on a tractor.

5.6.1 Explain the reason for using this coupling. (3)

5.6.2 State THREE advantages of this coupling. (3)

5.7 Study the image below and answer the questions that follow.

5.7.1 Identify the type of gear shown above. (1)

5.7.2 Name ONE disadvantage of this type of gear. (1)

5.7.3 Determine the speed ratio if the drive gear has 45 teeth and the driven gear has 15 teeth. (Show ALL calculations.) (4)

[40]

Downloaded from Grade12pastexampapers.co.za

QUESTION 6: WATER MANAGEMENT

Start this question on a NEW page.

6.1 The pictures below show two different irrigation systems.

A

B

6.1.1 Identify the irrigation system that can best be used on large maize fields and motivate your answer. (3)

6.1.2 Name TWO methods that a farmer can use to reduce water wastage during irrigation. (2)

6.1.3 List THREE disadvantages of a centre-pivot irrigation system. (3)

6.1.4 Name TWO preventative measures to limit theft of copper cables used in the centre-pivot irrigation system. (2)

6.2 Choose the function in COLUMN B that matches the pipe fitting in COLUMN A. Write only the letter (A–C) next to the question numbers (6.2.1 to 6.2.3) in the ANSWER BOOK, e.g. 6.2.4 D.

KOLOM A	KOLOM B
6.2.1	A to shut down water supply in order to fit a new element in a geyser
6.2.2	B to open and close the sluice gate of a water channel
6.2.3	C to prevent water from flowing back into the system

(3 x 1) (3)

Downloaded from Grade12pastexampapers.co.za

6.3 A water backup system is used to provide water to a farm house when the main water supply from the municipality is interrupted. Study the list of items below that can be used for the construction of a water backup system and answer the questions that follow.

- Reservoir
- Ball valve
- Pipes
- Pump
- Valves
- Taps

6.3.1 Draw a labelled sketch of a water backup system for a house. Use the following criteria:

Items are in the correct order	1
Labelling/Inscription of inlet and outlet flow of water	2
Correct functioning of system	1

(4)

6.3.2 Explain the working principle of the water backup system that you designed. (6)

6.4 The flow rate in a water delivery system is 400 litres per minute. It takes 25 minutes to fill the reservoir. Determine the reservoir's capacity in litres.

Show ALL calculations. (4)

Downloaded from Grade12pastexampapers.co.za

6.5 Choose the application in COLUMN B that matches the communication device in COLUMN A. Write only the letter (A–C) next to the question numbers (6.5.1 to 6.5.3) in the ANSWER BOOK, e.g. 6.5.4 D.

COLUMN A	COLUMN B
6.5.1	**A**
6.5.2	**B**
6.5.3	**C** 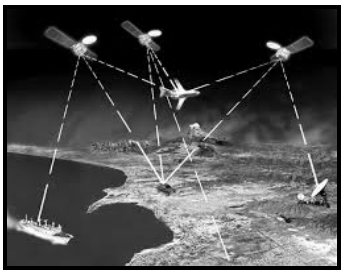

(3 x 1) (3)
[30]

TOTAL SECTION B: 160
GRAND TOTAL: 200

Copyright reserved

Downloaded from Grade12pastexampapers.co.za